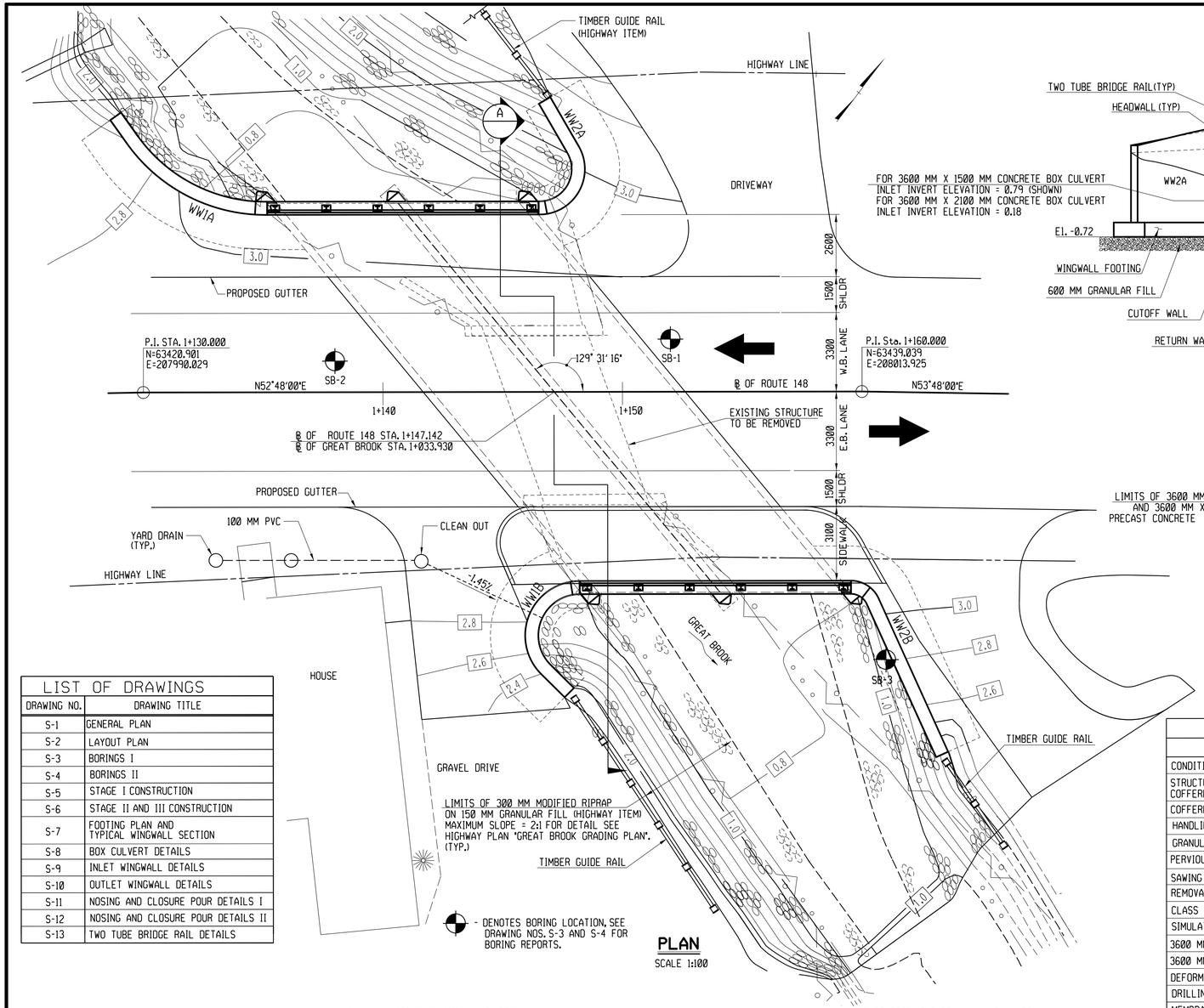

PLAN

SCALE 1:100

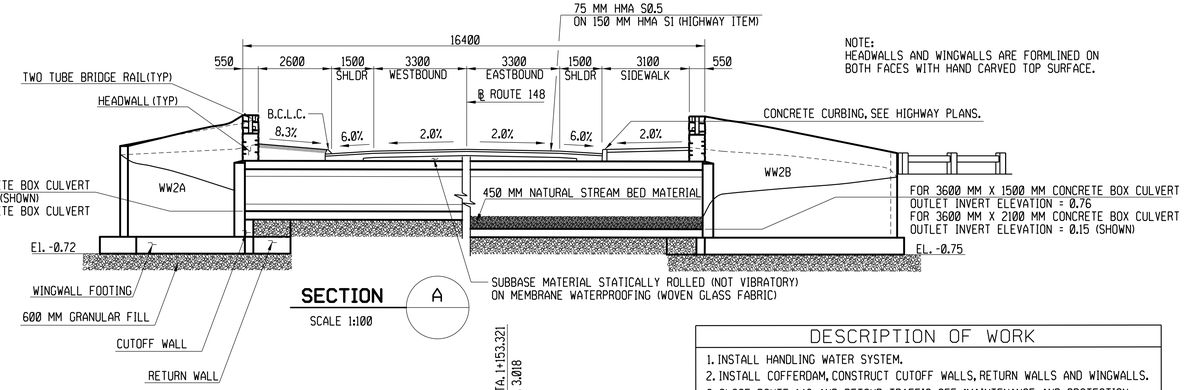

SECTION A

SCALE 1:100

NOTE:
HEADWALLS AND WINGWALLS ARE FORMLINED ON BOTH FACES WITH HAND CARVED TOP SURFACE.

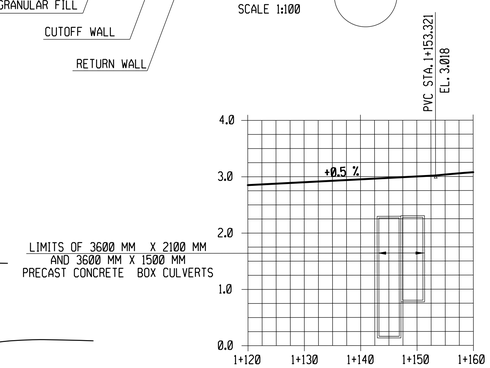

PROFILE - ℄ ROUTE 148

SCALE : HORIZONTAL 1 : 500
VERTICAL 1 : 50

DESCRIPTION OF WORK

1. INSTALL HANDLING WATER SYSTEM.
2. INSTALL COFFERDAM, CONSTRUCT CUTOFF WALLS, RETURN WALLS AND WINGWALLS.
3. CLOSE ROUTE 148 AND DETOUR TRAFFIC. SEE "MAINTENANCE AND PROTECTION OF TRAFFIC" SPECIAL PROVISION.
4. REMOVE EXISTING STRUCTURE AND WINGWALLS.
5. INSTALL PRECAST CONCRETE BOX CULVERTS.
6. CONSTRUCT NOSINGS AND HEADWALLS.
7. INSTALL RIPRAP AND REMOVE HANLING WATER SYSTEM AND COFFERDAM.
8. CONSTRUCT ROADWAY STRUCTURE AND REOPEN ROUTE 148 TO TRAFFIC.

GENERAL NOTES :

1. SPECIFICATIONS : CONNECTICUT DEPARTMENT OF TRANSPORTATION FORM 816 (2004), SUPPLEMENTAL SPECIFICATIONS DATED JULY 2010 AND SPECIAL PROVISIONS

2. DESIGN SPECIFICATIONS : AASHTO LRFD BRIDGE DESIGN SPECIFICATION CUSTOMARY U.S. UNITS 5TH EDITION 2010 AS SUPPLEMENTED BY THE CONNECTICUT DEPARTMENT OF TRANSPORTATION BRIDGE DESIGN MANUAL (2003)

3 ALLOWABLE DESIGN STRESSES :

CONCRETE FOR PRECAST COMPONENTS		BASED ON F'C = 35 MPA
CLASS "A" CONCRETE		BASED ON F'C = 21 MPA
REINFORCEMENT (ASTM A615M GRADE 420)		FS (TENSILE) = 165 MPA
WELDED WIRE FABRIC	(ASTM A185)	FS (TENSILE) = 515 MPA
	(ASTM A497)	FS (TENSILE) = 550 MPA

4. LIVE LOAD : HL 93

5. FOUNDATION PRESSURES : SEE WINGWALL DETAILS SHEET .

6. DIMENSIONS : ALL DIMENSION SHOWN ON THE PLANS ARE IN MILLIMETERS EXCEPT IF NOTED OTHERWISE. ALL ELEVATIONS ARE GIVEN IN METERS. WHEN ELEVATIONS ARE GIVEN TO LESS THAN THREE DECIMAL PLACES, THE OMITTED DIGITS SHALL BE ASSUMED TO BE ZEROS.

7. CLASS "A" CONCRETE: CLASS "A" CONCRETE SHALL BE USED FOR CAST-IN-PLACE CONCRETE THROUGHOUT.

8. SILICONE JOINT SEAL : SEE SPECIAL PROVISION "SECTION 6.01-CONCRETE FOR STRUCTURES"

9. EXPOSED EDGES : EXPOSED EDGES OF CONCRETE SHALL BE BEVELED 25 MM X 25 MM UNLESS DIMENSIONED OTHERWISE.

10. CONCRETE COVER : ALL REINFORCEMENT SHALL HAVE 50 MM UNLESS DIMENSIONED OTHERWISE.

11. REINFORCEMENT : ALL REINFORCEMENT SHALL BE ASTM A615M GRADE 420 UNLESS NOTED OTHERWISE.

12. PREFORMED EXPANSION JOINT FILLER AND SILICONE JOINT SEAL: THE COST OF FURNISHING AND INSTALLING PREFORMED EXPANSION JOINT FILLER AND SILICONE JOINT SEAL SHALL BE INCLUDED IN THE COST OF THE ITEM "CLASS "A" CONCRETE."

13. CONSTRUCTION JOINTS : CONSTRUCTION JOINTS, OTHER THAN THOSE SHOWN ON THE PLANS, WILL NOT BE PERMITTED WITHOUT THE PRIOR APPROVAL OF THE ENGINEER.

14. HANDLING WATER : FOR PROPOSED METHOD OF DIVERTING WATER SEE DRAWING NOS. S-5 AND S-6.

15. FOR CONCRETE FORMLINER PATTERN AND COLOR SEE SIMULATED STONE MASONRY SPECIAL PROVISION. TOP OF WINGWALLS AND HEADWALLS TO BE HAND CARVED.

16. PRECAST CONCRETE BOX CULVERT: THE TOP AND BOTTOM SLABS AND WALL THICKNESSES SHALL BE 300 MM.

LIST OF DRAWINGS

DRAWING NO.	DRAWING TITLE
S-1	GENERAL PLAN
S-2	LAYOUT PLAN
S-3	BORINGS I
S-4	BORINGS II
S-5	STAGE I CONSTRUCTION
S-6	STAGE II AND III CONSTRUCTION
S-7	FOOTING PLAN AND TYPICAL WINGWALL SECTION
S-8	BOX CULVERT DETAILS
S-9	INLET WINGWALL DETAILS
S-10	OUTLET WINGWALL DETAILS
S-11	NOSING AND CLOSURE POUR DETAILS I
S-12	NOSING AND CLOSURE POUR DETAILS II
S-13	TWO TUBE BRIDGE RAIL DETAILS

QUANTITIES

ITEM	UNIT	AMOUNT
CONDITION SURVEY (SITE NO. 1)	L.S.	L.S.
STRUCTURE EXCAVATION - EARTH (EXCLUDING COFFERDAM AND DEWATERING)	M^3	1100
COFFERDAM AND DEWATERING	M	160
HANDLING WATER	L.S.	L.S.
GRANULAR FILL	M^3	240
PERVIOUS STRUCTURE BACKFILL	M^3	345
SAWING AND SEALING JOINTS	M	25
REMOVAL OF EXISTING BRIDGE	L.S.	L.S.
CLASS "A" CONCRETE	M^3	124
SIMULATED STONE MASONRY	M^2	165
3600 MM X 1500 MM PRECAST CONCRETE BOX CULVERT	M	22
3600 MM X 2100 MM PRECAST CONCRETE BOX CULVERT	M	22
DEFORMED STEEL BARS	KG	5600
DRILLING HOLES AND GROUTING DOWELS	EA	58
MEMBRANE WATERPROOFING (WOVEN GLASS FABRIC)	M^2	190
DAMPPROOFING	M^2	90
TEMPORARY EARTH RETAINING SYSTEM	M^2	8
BAGGED STONE	BAG	48
TWO-TUBE BRIDGE RAIL	M	23

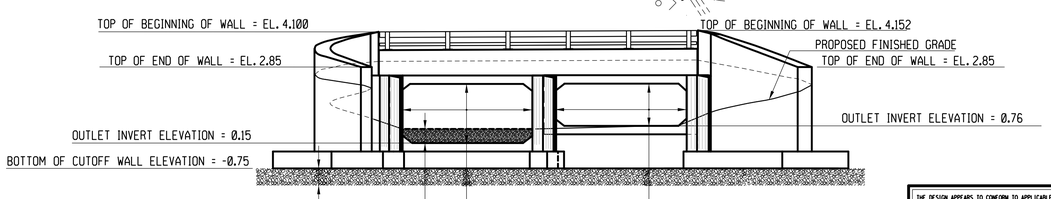

OUTLET ELEVATION

SCALE 1:100

INSPECTION OF FIELD WELDS

METHOD	UNIT	QUANTITY
ULTRASONIC	MM	0
MAGNETIC PARTICLE	M	0

THE DESIGN APPEARS TO CONFORM TO APPLICABLE CRITERIA. APPROVAL IS NOT TO BE CONSTRUED TO MEAN THAT ALL ASPECTS OF THE DESIGN HAVE BEEN PERSONALLY CHECKED BY THE UNDERSIGNED.

Joseph C. Cancelliere
2011.08.05 09:17:24
-04'00'

TRANSPORTATION PRINCIPAL ENGINEER

HYDRAULIC DATA

DRAINAGE AREA = 13.83 SQ. KM.
DESIGN FREQUENCY = 100 YEARS
DESIGN DISCHARGE = 25.5 CMS
AVERAGE DAILY FLOW ELEV. = 0.84 M
UPSTREAM DESIGN WATER SURFACE ELEV. = 2.46 M
DOWNSTREAM DESIGN WATER SURFACE ELEV. = 2.14 M

NOTICE TO BRIDGE INSPECTORS

THE DEPARTMENT'S BRIDGE SAFETY PROCEDURES REQUIRE THIS BRIDGE TO BE INSPECTED FOR, BUT NOT LIMITED TO, ALL APPROPRIATE COMPONENTS INDICATED IN THE GOVERNING MANUALS FOR BRIDGE INSPECTION. ATTENTION MUST BE GIVEN TO INSPECTING THE FOLLOWING SPECIAL COMPONENTS AND DETAILS. (THE LISTING OF COMPONENTS FOR SPECIFIC ATTENTION SHALL NOT BE CONSTRUED TO REDUCE THE IMPORTANCE OF INSPECTION OF ANY OTHER COMPONENT OF THE STRUCTURE.) THE FREQUENCY OF INSPECTION OF THIS STRUCTURE SHALL BE IN ACCORDANCE WITH THE GOVERNING MANUALS FOR BRIDGE INSPECTION, UNLESS OTHERWISE DIRECTED BY THE MANAGER OF BRIDGE SAFETY AND EVALUATION.

COMPONENT OR DETAIL	BRIDGE SHEET REFERENCE
FOLLOW NORMAL INSPECTION PROCEDURES.	———

REV.	DATE	REVISION DESCRIPTION	SHEET NO.

Filename: Border Version: 6/1/05

THE INFORMATION, INCLUDING ESTIMATED QUANTITIES OF WORK, SHOWN ON THESE SHEETS IS BASED ON LIMITED INVESTIGATIONS BY THE STATE AND IS IN NO WAY WARRANTED TO INDICATE THE CONDITIONS OF ACTUAL QUANTITIES OF WORK WHICH WILL BE REQUIRED.

DESIGNER/DRAFTER: BW
CHECKED BY: JCM
SCALE AS NOTED

STATE OF CONNECTICUT
DEPARTMENT OF TRANSPORTATION

ENGINEER: OFFICE OF ENGINEERING
APPROVED BY: DATE:

OFFICE OF ENGINEERING

PROJECT TITLE:
ROUTE 148 OVER GREAT BROOK
BR. NO. 02695
BRIDGE REPLACEMENT

TOWN: **CHESTER**

DRAWING TITLE: **GENERAL PLAN**

PROJECT NO. **26-118**
DRAWING NO. **S-1**
SHEET NO. **06.01**

WORKING POINTS	COORDINATES		STATION	OFFSET
	N	E		
WP 1	63429.646	207982.228	-	-
WP 2	63429.294	207983.385	-	-
WP 3	63435.656	207985.320	1+135.171	14.600
WP 4	63430.359	207989.341	-	-
WP 5	63433.609	207993.746	-	-
WP 6	63437.218	207998.376	-	-
WP 7	63438.301	207997.554	1+146.515	9.310
WP 8	63439.550	207998.092	-	-
WP 9	63440.487	207995.915	-	-
WP 10	63421.900	208011.797	-	-
WP 11	63422.077	208010.438	-	-
WP 12	63423.788	208010.662	1+148.181	10.175
WP 13	63425.162	208009.619	-	-
WP 14	63428.770	208014.249	-	-
WP 15	63432.020	208018.654	-	-
WP 16	63431.443	208019.093	1+159.522	9.175
WP 17	63432.080	208019.439	-	-
WP 18	63428.730	208025.608	-	-

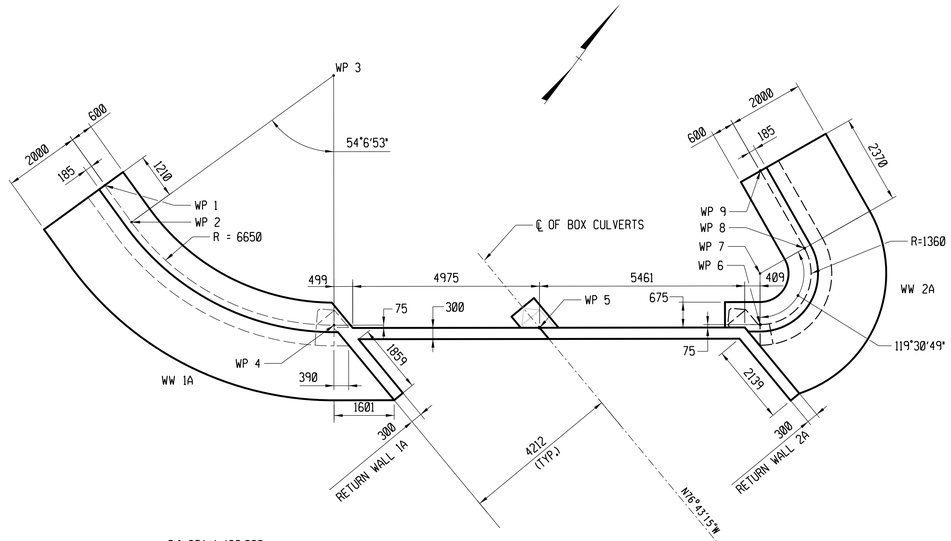

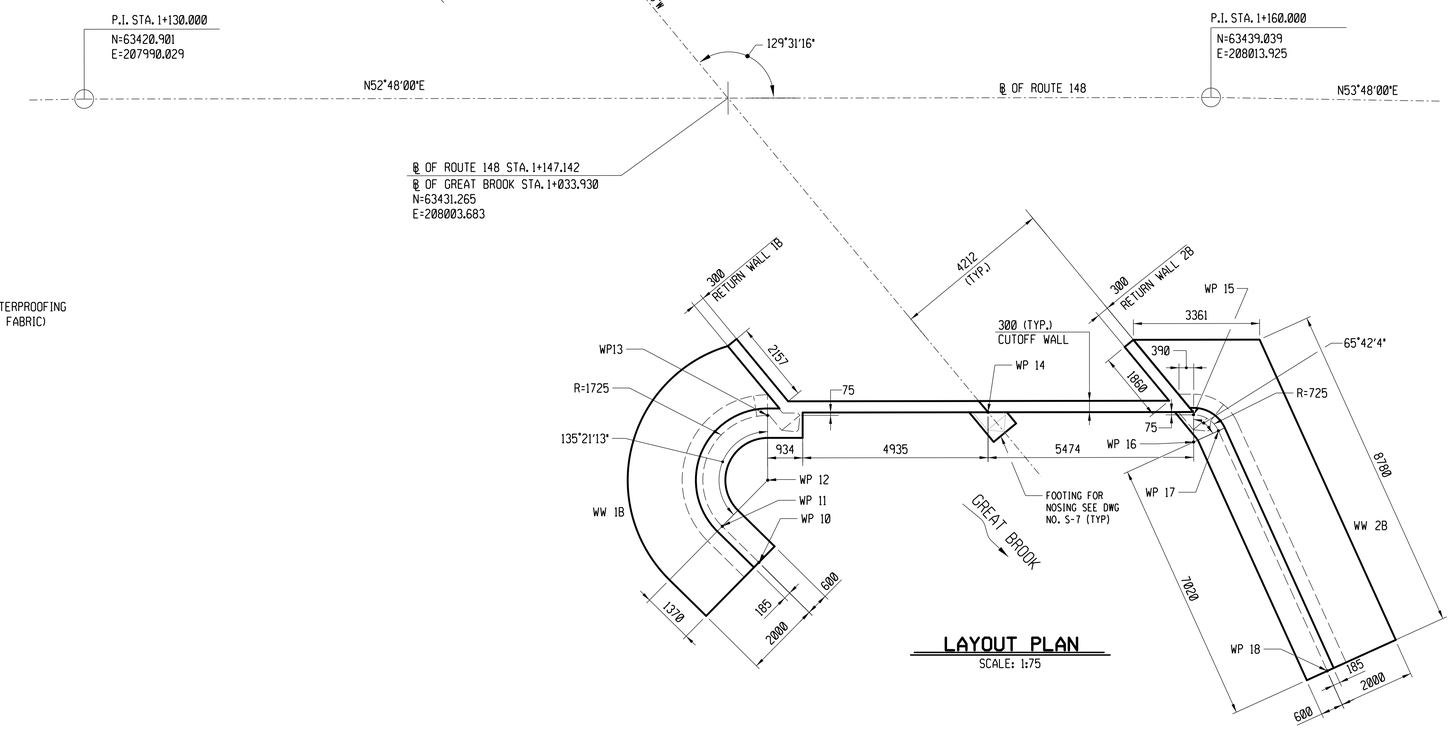

LAYOUT PLAN

SCALE: 1:75

AFTER PLACING CAST-IN-PLACE NOSE SECTIONS, THIS JOINT SHALL BE FILLED BY "FLOATING" SAND INTO IT. USE ONLY ENOUGH WATER SO THAT AFTER IT HAS DRAINED AWAY THE SAND WILL TIGHTLY FILL THE ENTIRE JOINT.

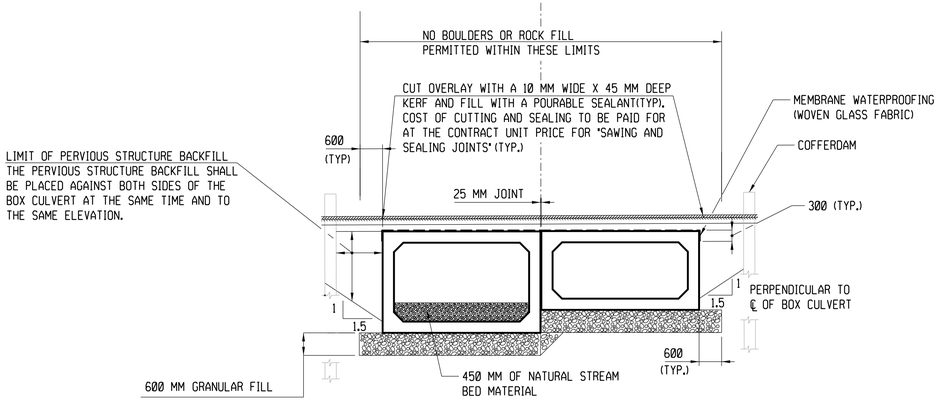

BOX CULVERT - TYPICAL ROADWAY SECTION

SCALE: 1:75

REV.	DATE	REVISION DESCRIPTION	SHEET NO.

Filename: Border Version: 6/1/05

THE INFORMATION, INCLUDING ESTIMATED QUANTITIES OF WORK, SHOWN ON THESE SHEETS IS BASED ON LIMITED INVESTIGATIONS BY THE STATE AND IS IN NO WAY WARRANTED TO INDICATE THE CONDITIONS OF ACTUAL QUANTITIES OF WORK WHICH WILL BE REQUIRED.

DESIGNER/DRAFTER: BW

CHECKED BY: JCM

SCALE AS NOTED

STATE OF CONNECTICUT
DEPARTMENT OF TRANSPORTATION

ENGINEER: OFFICE OF ENGINEERING

APPROVED BY: DATE:

OFFICE OF ENGINEERING

PROJECT TITLE:
ROUTE 148 OVER GREAT BROOK
BR. NO. 02695
BRIDGE REPLACEMENT

TOWN: CHESTER

DRAWING TITLE: LAYOUT PLAN

PROJECT NO. 26-118

DRAWING NO. S-2

SHEET NO. 06.02

C. Purdell	**SM - 001- M REV. 12/94** **BORING REPORT**	Hole No. **SB - 1**
DRILLER M. McDonnell	STATE OF CONNECTICUT DEPARTMENT OF TRANSPORTATION	Line & Station Sta. 1+152
INSPECTOR M. McDonnell	TOWN: Chester	Offset 2.2m Lt.
	PROJECT NAME: Route 148 over Great Brook	N. Coordinate 63436
SOILS ENGINEER	PROJECT NUMBER: 170-1475	E. Coordinate 208006
	BORING CONTRACTOR: ConnDOT	ConnDOT PRIME DESIGNER

Surface Elevation: 2.76			Casing				Auger		Mud	Sampler		Core Barrel				
Date Started: 1/27/99			Utilized						X	X						
Date Finished: 1/27/99			Type	BW	NW	HW	Pipe	Solid	Hollow	SS		B(st)	B(dt)	NX(st)	NX(dt)	
Groundwater Observations			Size I.D. (mm)	60	76	100	64			35		35	35	55	55	
@ 1.5 m after 0 hours			Hammer (kg)	136	136	136	136		Bit	63.5		Type		Diamond		
@ m after hours			Fall (m)	0.6	0.6	0.6	0.6			0.76		of Bit		Carbide		

DEPTH	Casing blows per half meter	SAMPLE DEPTH IN METERS FROM - TO	NO.	PEN. m	REC. m	Type	BLOWS PER 0.15 METERS ON SAMPLER 0.0 - 0.15	0.15 - 0.30	0.30 - 0.45	0.45 - 0.60	STRATA CHANGE: DEPTH, ELEV.	FIELD IDENTIFICATION OF SOIL, REMARKS (INCL. COLOR, LOSS OF WASH WATER, ETC.)
											0.17	Bituminous Concrete Pavement
											2.59	
		1.5 - 2.1	1	0.60	0.32	D	1	1	1	2		Brown c to f GRAVEL, and c to f SAND, trace silt, with Cobbles (Fill)
		3.0 - 3.6	2	0.60	0.45	D	20	58	14	10		
											3.60	
											-0.84	
5		4.5 - 5.1	3	0.60	0.60	D	5	8	8	8		Brown c to f SAND, little Silt
		6.0 - 6.6	4	0.60	0.60	D	3	7	8	7		
											7.00	
											-4.24	
		7.6 - 8.2	5	0.60	0.60	D	6	4	3	6		Grey Brown c to f SAND, little Silt, trace f Gravel
		9.1 - 9.7	6	0.60	0.60	D	4	7	10	11		
10											10.00	
											-7.24	
		10.6 - 11.2	7	0.60	0.60	D	8	5	10	10		Brown c to f SAND, little Silt
		12.1 - 12.8	8	0.60	0.60	D	5	8	10	10		
											13.00	
											-10.24	
		13.7 - 14.3	9	0.60	0.32	D	20	35	40	50		Brown c to f GRAVEL, and c to f SAND, little Silt
15			10	0.30	0.30	D	40	50				

Casing Type	From	To	Meters of Earth	Rock
			15.5 m	0.0 m
			No. of Soil Samples	
			10	

NOTES: 4.5m of blowback in casing at depth of 10.6m. Drilled out to get sample.

SAMPLE TYPE CODING: D=Driven C=Core A=Auger UP=Undisturbed Piston V=Vane Test
PROPORTIONS USED: Trace = 1 - 10%, Little = 10 - 20%, Some = 20 - 35%, And = 35 - 50%

Hole No. **SB - 1**
Sheet 1 of 2

C. Purdell	**SM - 001- M REV. 12/94** **BORING REPORT**	Hole No. **SB - 1**
DRILLER M. McDonnell	STATE OF CONNECTICUT DEPARTMENT OF TRANSPORTATION	Line & Station Sta. 1+152
INSPECTOR M. McDonnell	TOWN: Chester	Offset 2.2m Lt.
	PROJECT NAME: Route 148 over Great Brook	N. Coordinate 63436
SOILS ENGINEER	PROJECT NUMBER: 170-1475	E. Coordinate 208006
	BORING CONTRACTOR: ConnDOT	ConnDOT PRIME DESIGNER

Surface Elevation: 2.76			Casing				Auger		Mud	Sampler		Core Barrel				
Date Started: 1/27/99			Utilized					X		X						
Date Finished: 1/27/99			Type	BW	NW	HW	Pipe	Solid	Hollow	SS		B(st)	B(dt)	NX(st)	NX(dt)	
Groundwater Observations			Size I.D. (mm)	60	76	100	64			35		35	35	55	55	
@ 1.5 m after 0 hours			Hammer (kg)	136	136	136	136		Bit	63.5		Type		Diamond		
@ m after hours			Fall (m)	0.6	0.6	0.6	0.6			0.76		of Bit		Carbide		

DEPTH	Casing blows per half meter	SAMPLE DEPTH IN METERS FROM - TO	NO.	PEN. m	REC. m	Type	BLOWS PER 0.15 METERS ON SAMPLER 0.0 - 0.15	0.15 - 0.30	0.30 - 0.45	0.45 - 0.60	STRATA CHANGE: DEPTH, ELEV.	FIELD IDENTIFICATION OF SOIL, REMARKS (INCL. COLOR, LOSS OF WASH WATER, ETC.)
		15.2 - 15.5	10	0.30	0.30	D	40	50				Brown c to f GRAVEL, and c to f SAND, little Silt
											15.50	
											-12.74	Bottom of Boring
20												
25												
30												

Casing Type	From	To	Meters of Earth	Rock
			15.5 m	0.0 m
			No. of Soil Samples	
			10	

NOTES: 4.5m of blowback in casing at depth of 10.6m. Drilled out to get sample.

SAMPLE TYPE CODING: D=Driven C=Core A=Auger UP=Undisturbed Piston V=Vane Test
PROPORTIONS USED: Trace = 1 - 10%, Little = 10 - 20%, Some = 20 - 35%, And = 35 - 50%

Hole No. **SB - 1**
Sheet 2 of 2

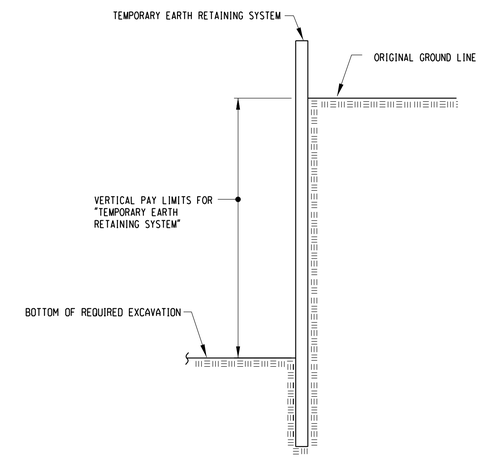

VERTICAL PAY LIMITS
TEMPORARY EARTH RETAINING SYSTEM

N.T.S.

REV.	DATE	REVISION DESCRIPTION	SHEET NO.

Filename: Border Version: 6/1/05

THE INFORMATION, INCLUDING ESTIMATED QUANTITIES OF WORK, SHOWN ON THESE SHEETS IS BASED ON LIMITED INVESTIGATIONS BY THE STATE AND IS IN NO WAY WARRANTED TO INDICATE THE CONDITIONS OF ACTUAL QUANTITIES OF WORK WHICH WILL BE REQUIRED.

DESIGNER/DRAFTER: **BW**
CHECKED BY: **JCM**
SCALE AS NOTED

STATE OF CONNECTICUT
DEPARTMENT OF TRANSPORTATION

ENGINEER: **OFFICE OF ENGINEERING**
APPROVED BY: DATE:

OFFICE OF ENGINEERING

PROJECT TITLE:
ROUTE 148 OVER GREAT BROOK
BR. NO. 02695
BRIDGE REPLACEMENT

TOWN: **CHESTER**
DRAWING TITLE: **BORINGS I**

PROJECT NO. **26-118**
DRAWING NO. **S-3**
SHEET NO. **06.03**

C. Purdell	**SM - 001- M REV. 12/94** **BORING REPORT**	Hole No. **SB - 2**
DRILLER	STATE OF CONNECTICUT	Line & Station Sta. 1+138
M. McDonnell	DEPARTMENT OF TRANSPORTATION	Offset 1.3m Lt.
INSPECTOR	TOWN: Chester	N. Coordinate 63427
M. McDonnell	PROJECT NAME: Bridge 2695	E. Coordinate 207996
SOILS ENGINEER	PROJECT NUMBER: 170-1475	ConnDOT
	BORING CONTRACTOR: ConnDOT	PRIME DESIGNER

Surface Elevation: 2.83		Casing					Auger		Mud	Sampler		Core Barrel							
Date Started: 1/26/99		Utilized																	
Date Finished: 1/26/99		Type		BW	NW	HW	Pipe	Solid	Hollow		SS		B(st)	B(dt)	NX(st)	NX(dt)			
Groundwater Observations		Size I.D. (mm)		60	76	100	64				35		35	35	55	55			
@ 1.5 m after 0 hours		Hammer (kg)		136	136	136	136			Bit	63.5		Type		Diamond				
@ m after hours		Fall (m)		0.6	0.6	0.6	0.6				0.76		of Bit		Carbide				

DEPTH	Casing blows per half meter	SAMPLE DEPTH IN METERS FROM - TO	NO.	PEN. m	REC. m	Type	BLOWS PER 0.15 METERS ON SAMPLER 0.0 - 0.15	0.15 - 0.30	0.30 - 0.45	0.45 - 0.60	STRATA CHANGE: DEPTH, ELEV.	FIELD IDENTIFICATION OF SOIL, REMARKS (INCL. COLOR, LOSS OF WASH WATER, ETC.)
											0.20	Bituminous Concrete Pavement
											2.63	Brown f to c SAND, and f to c GRAVEL, some Silt, with Cobbles (Fill)
		1.5 - 2.1	1	0.60	0.30	D	2	8	13	14		
											3.00	
		3.0 - 3.6	2	0.60	0.36	D	12	9	6	5	-0.17	Brown c to f SAND, trace f Gravel, trace Silt
5		4.5 - 5.1	3	0.60	0.52	D	7	6	6	8		
											5.80	
		6.0 - 6.6	4	0.60	0.51	D	4	5	5	7	-2.97	Brown c to f SAND, little Silt, trace f Gravel
		7.5 - 8.1	5	0.60	0.60	D	1	2	2	3	7.60	
											-4.77	Grey Brown c to f SAND, trace f Gravel, trace Silt
		9.0 - 9.6	6	0.60	0.50	D	2	4	6	10	9.10	
10											-6.27	Brown c to f SAND, little Silt, trace f Gravel
		10.6 - 11.2	7	0.60	0.60	D	3	4	6	10	10.60	
											-7.77	Brown f to c SAND, and SILT.
		12.5 - 14.0	1	1.50	0.48	C					12.60	
											-9.77	Weathered Schist
											14.00	
											-11.17	Bottom of Boring
15												

Casing Type	From	To	Meters of Earth	Rock
			12.5 m	1.5 m
			No. of Soil Samples	
			7	

NOTES: 3.0m of blowback in casing at depth of 9.1m. Drilled out to get sample.

SAMPLE TYPE CODING: D=Driven C=Core A=Auger UP=Undisturbed Piston V=Vane Test
PROPORTIONS USED: Trace = 1 - 10%, Little = 10 - 20%, Some = 20 - 35%, And = 35 - 50%

Hole No. SB - 2
Sheet 1 of 1

C. Purdell	**SM -001-M REV. 12/94** **BORING REPORT**	Hole No. **SB -3**
DRILLER	STATE OF CONNECTICUT	Line & Station Sta. 1+161
M. McDonnell	DEPARTMENT OF TRANSPORTATION	Offset 11.2m Rt
INSPECTOR	TOWN: Chester	N. Coordinate 63431
M. McDonnell	PROJECT NAME: Bridge 2695	E. Coordinate 208021
SOILS ENGINEER	PROJECT NUMBER: 170-1475	ConnDOT
	BORING CONTRACTOR: ConnDOT	PRIME DESIGNER

Surface Elevation: 2.64		Casing					Auger		Mud	Sampler		Core Barrel							
Date Started: 1/29/99		Utilized																	
Date Finished: 1/29/99		Type		BW	NW	HW	Pipe	Solid	Hollow		SS		B(st)	B(dt)	NX(st)	NX(dt)			
Groundwater Observations		Size I.D. (mm)		60	76	100	64				35		35	35	55	55			
@ 1.5 m after 0 hours		Hammer (kg)		136	136	136	136			Bit	63.5		Type		Diamond				
@ ——— m after ——— hours		Fall (m)		0.6	0.6	0.6	0.6				0.76		of Bit		Carbide				

DEPTH	Casing blows per half meter	SAMPLE DEPTH IN METERS FROM - TO	NO.	PEN. m	REC. m	Type	BLOWS PER 0.15 METERS ON SAMPLER 0.0 - 0.15	0.15 - 0.30	0.30 - 0.45	0.45 - 0.60	STRATA CHANGE: DEPTH, ELEV.	FIELD IDENTIFICATION OF SOIL, REMARKS (INCL. COLOR, LOSS OF WASH WATER, ETC.)
												Brown f to c SAND, and f to c GRAVEL, trace Silt (Fill)
		1.5 - 2.1	1	0.60	0.00	D	4	10	12	10		
											3.00	
		3.0 - 3.6	2	0.60	0.42	D	12	7	9	14	-0.36	Brown c to f SAND, trace f Gravel trace Silt
											4.50	
5		4.5 - 5.1	3	0.60	0.50	D	5	7	10	8	-1.86	Brown c to f SAND, little Silt
		6.0 - 6.6	4	0.60	0.60	D	4	6	9	11		
		7.5 - 8.1	5	0.60	0.60	D	13	22	19	18		
		9.0 - 9.6	6	0.60	0.60	D	3	8	9	8		
10												
		10.5 - 11.1	7	0.60	0.60	D	4	7	8	8		
		12.0 - 12.6	8	0.60	0.60	D	5	6	6	8		
		13.6 - 14.1	9	0.60	0.60	D	4	8	9	10		
15												

Casing Type	From	To	Meters of Earth	Rock
			15.2 m	0.0 m
			No. of Soil Samples	
			8	

NOTES:

SAMPLE TYPE CODING: D=Driven C=Core A=Auger UP=Undisturbed Piston V=Vane Test
PROPORTIONS USED: Trace = 1 - 10%, Little = 10 - 20%, Some = 20 - 35%, And = 35 - 50%

Hole No. SB -3
Sheet 1 of 2

C. Purdell	**SM - 001- M REV. 12/94** **BORING REPORT**	Hole No. **SB - 3**
DRILLER	STATE OF CONNECTICUT	Line & Station Sta. 1+161
M. McDonnell	DEPARTMENT OF TRANSPORTATION	Offset 11.2m Rt.
INSPECTOR	TOWN: Chester	N. Coordinate 63431
M. McDonnell	PROJECT NAME: Bridge 2695	E. Coordinate 208021
SOILS ENGINEER	PROJECT NUMBER: 170-1475	ConnDOT
	BORING CONTRACTOR: ConnDOT	PRIME DESIGNER

Surface Elevation: 2.64		Casing					Auger		Mud	Sampler		Core Barrel							
Date Started: 1/29/99		Utilized																	
Date Finished: 1/29/99		Type		BW	NW	HW	Pipe	Solid	Hollow		SS		B(st)	B(dt)	NX(st)	NX(dt)			
Groundwater Observations		Size I.D. (mm)		60	76	100	64				35		35	35	55	55			
@ 1.5 m after 0 hours		Hammer (kg)		136	136	136	136			Bit	63.5		Type		Diamond				
@ m after hours		Fall (m)		0.6	0.6	0.6	0.6				0.76		of Bit		Carbide				

DEPTH	Casing blows per half meter	SAMPLE DEPTH IN METERS FROM - TO	NO.	PEN. m	REC. m	Type	BLOWS PER 0.15 METERS ON SAMPLER 0.0 - 0.15	0.15 - 0.30	0.30 - 0.45	0.45 - 0.60	STRATA CHANGE: DEPTH, ELEV.	FIELD IDENTIFICATION OF SOIL, REMARKS (INCL. COLOR, LOSS OF WASH WATER, ETC.)
											15.20	Brown c to f SAND, little Silt Refusal
											-12.56	Bottom of Boring
20												
25												
30												

Casing Type	From	To	Meters of Earth	Rock
			15.2 m	0.0 m
			No. of Soil Samples	
			8	

NOTES:

SAMPLE TYPE CODING: D=Driven C=Core A=Auger UP=Undisturbed Piston V=Vane Test
PROPORTIONS USED: Trace = 1 - 10%, Little = 10 - 20%, Some = 20 - 35%, And = 35 - 50%

Hole No. SB - 3
Sheet 2 of 2

REV.	DATE	REVISION DESCRIPTION	SHEET NO.

Filename: Border Version: 6/1/05

THE INFORMATION, INCLUDING ESTIMATED QUANTITIES OF WORK, SHOWN ON THESE SHEETS IS BASED ON LIMITED INVESTIGATIONS BY THE STATE AND IS IN NO WAY WARRANTED TO INDICATE THE CONDITIONS OF ACTUAL QUANTITIES OF WORK WHICH WILL BE REQUIRED.

DESIGNER/DRAFTER: BW
CHECKED BY: JCM
SCALE AS NOTED

STATE OF CONNECTICUT
DEPARTMENT OF TRANSPORTATION

ENGINEER: OFFICE OF ENGINEERING
APPROVED BY: DATE:

OFFICE OF ENGINEERING

PROJECT TITLE:
ROUTE 148 OVER GREAT BROOK
BR. NO. 02695
BRIDGE REPLACEMENT

TOWN: **CHESTER**

DRAWING TITLE: **BORINGS II**

PROJECT NO. **26-118**
DRAWING NO. **S-4**
SHEET NO. **06.04**

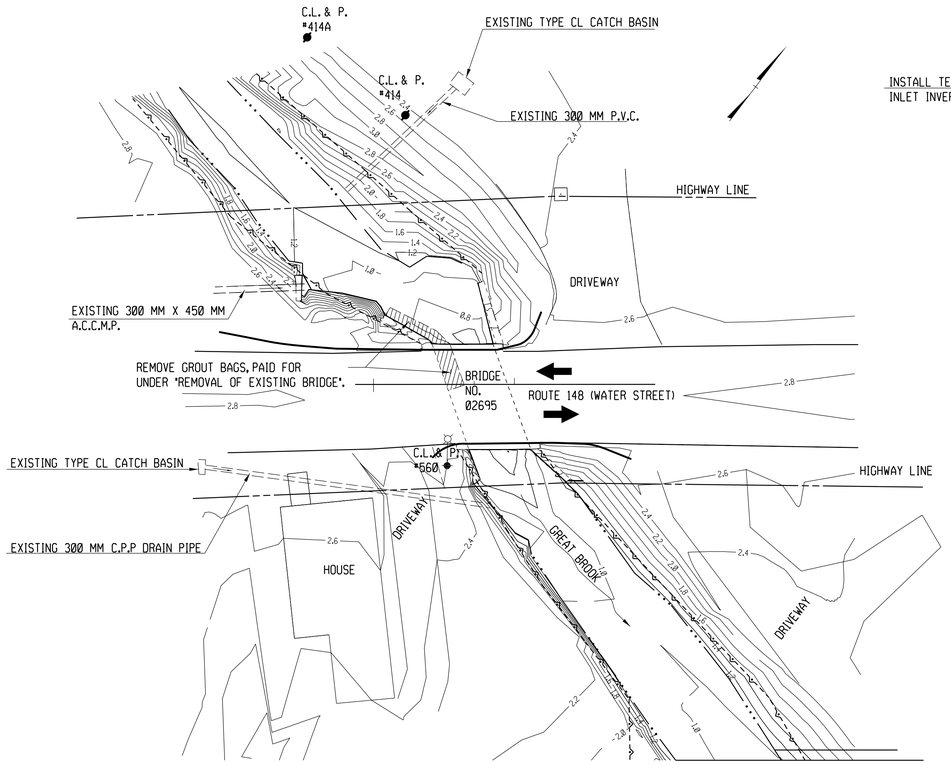

EXISTING CONDITION

SCALE: 1:200

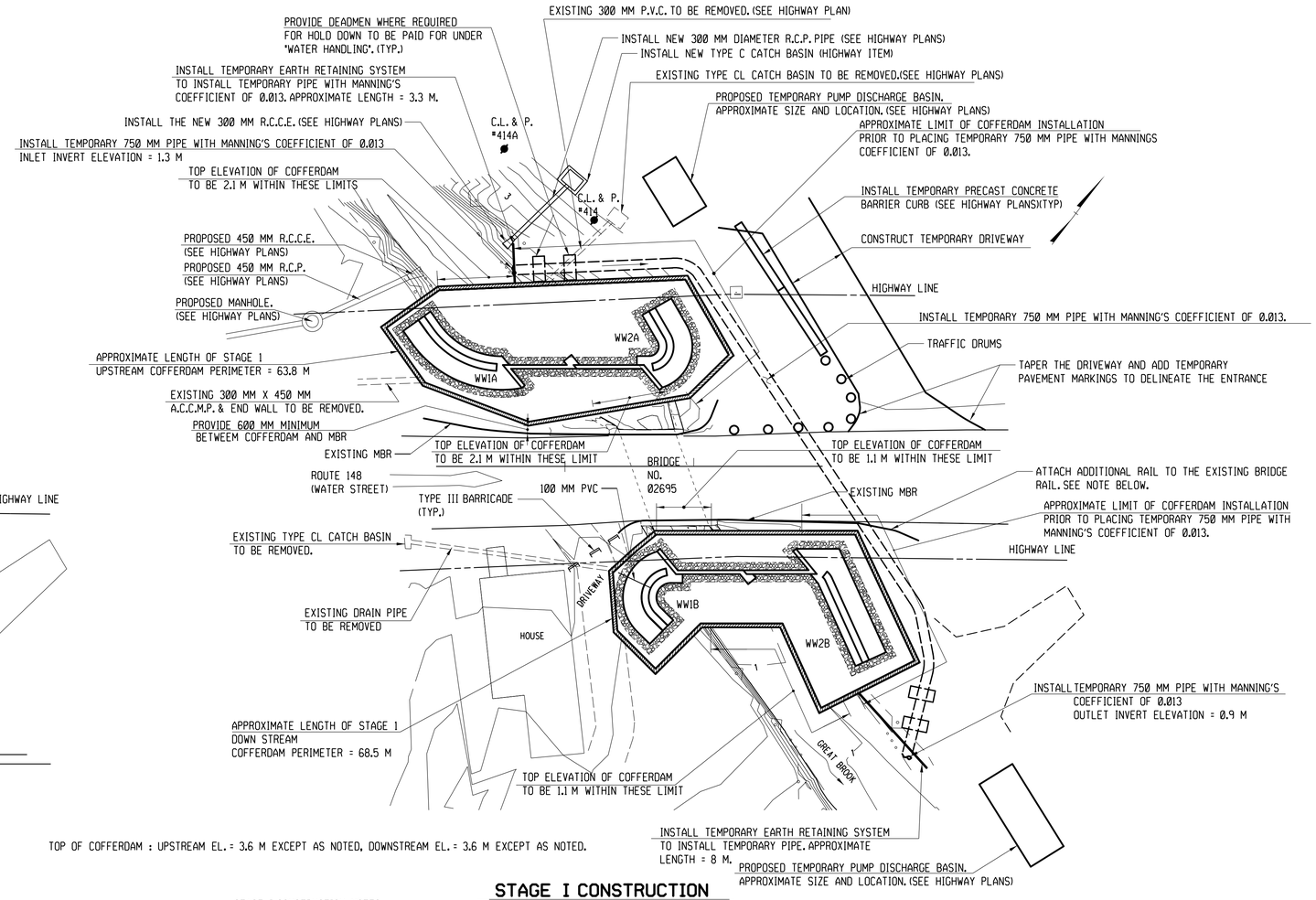

TOP OF COFFERDAM : UPSTREAM EL. = 3.6 M EXCEPT AS NOTED, DOWNSTREAM EL. = 3.6 M EXCEPT AS NOTED.

STAGE I CONSTRUCTION

SCALE: 1:200

TEMPORARY WATER HANDLING DATA
AVERAGE DAILY FLOW = 0.23 CM/S
AVERAGE SPRING FLOW = 0.42 CM/S
2-YEAR FREQUENCY DISCHARGE = 4.81 CM/S
TEMPORARY DESIGN DISCHARGE = 0.84 CM/S
TEMPORARY DESIGN FREQUENCY = LESS THAN 2-YEAR (TWICE THE AVERAGE SPRING FLOW)
TEMPORARY WATER SURFACE ELEVATION UPSTREAM = 2.12 M
TEMPORARY WATER SURFACE ELEVATION DOWNSTREAM = 0.97 M

STAGE I CONSTRUCTION NOTES

1 - PERFORM A CONDITION SURVEY PRIOR TO THE START OF CONSTRUCTION, SEE SPECIAL PROVISIONS.

2 - CONSTRUCT TEMPORARY DRIVEWAY AND REMOVE DRIVEWAY DRAINAGE (SEE HIGHWAY PLANS). INSTALL THE PROPOSED DRIVEWAY DRAINAGE AND TYPE C CATCH BASIN (SEE HIGHWAY PLANS). PLACE TEMPORARY PRECAST CONCRETE BARRIER CURB AND TRAFFIC DRUMS (SEE HIGHWAY PLANS) ALONG THE TEMPORARY NORTHEAST DRIVEWAY. PLACE TYPE III BARRICADE (SEE HIGHWAY PLANS) ACROSS SOUTHWEST DRIVEWAY. INSTALL PROPOSED MANHOLE AND DRAINAGE IN THE NORTHWEST QUADRANT. MODIFY SOUTHEAST METAL BEAM RAIL TO PROTECT TRAFFIC AT COFFERDAM. (ADDING MBR R-B350 SYSTEM 6, WITH TYPE 2 ANCHORAGE (HIGHWAY ITEM) TO EXISTING HIGHWAY RAIL). REMOVE ALL EXISTING DRAINAGE IN NORTHWEST AND SOUTHWEST QUADRANTS.

3 - INSTALL PORTION OF COFFERDAM AT INLET AND OUTLET EAST OF GREAT BROOK REQUIRED FOR PLACEMENT OF TEMPORARY 750 MM PIPE WITH MANNING'S COEFFICIENT OF 0.013. THIS WORK TO BE PAID FOR UNDER THE ITEM "COFFERDAM AND DEWATERING".

4 - INSTALL UPSTREAM AND DOWNSTREAM TEMPORARY EARTH RETAINING SYSTEM, EXCAVATE TRENCH AND INSTALL TEMPORARY 750MM PIPE WITH MANNING'S COEFFICIENT OF 0.013, INSTALL DEADMEN THEN BACKFILL THE PIPE. TRENCHING, PLACEMENT OF TEMPORARY PIPE WITH MANNING'S COEFFICIENT OF 0.013, DEADMEN AND BACKFILL TO BE PAID FOR UNDER THE ITEM "HANDLING WATER". TRENCHING AND INSTALLATION OF THE TEMPORARY 750MM PIPE WITH MANNING'S COEFFICIENT OF 0.013 ACROSS ROUTE 148 WILL BE DURING A SHORT DURATION ROAD CLOSURE IN ACCORDANCE WITH THE ITEM "PROSECUTION AND PROGRESS"

5 - COMPLETE INSTALLATION OF COFFERDAM UPSTREAM AND DOWNSTREAM, REMOVE PORTION OF EXISTING WINGWALLS AND GROUT BAGS AS NECESSARY. INSTALL TEMPORARY PUMP DISCHARGE BASINS. DIVERT THE STREAM THROUGH THE TEMPORARY 750 MM PIPE WITH MANNING'S COEFFICIENT OF 0.013.

6 - EXCAVATE TO REQUIRED ELEVATION AND PLACE GRANULAR FILL.

7 - CONSTRUCT CUTOFF WALLS, RETURN WALLS, WINGWALL FOOTINGS AND PORTION OF THE WINGWALL STEMS FOR THE BOX CULVERTS.

8 - IN WINGWALL 1B INSTALL PORTION OF 100MM PVC PIPE FOR YARD DRAIN.

REV.	DATE	REVISION DESCRIPTION	SHEET NO.

Filename: Border Version: 6/1/05

THE INFORMATION, INCLUDING ESTIMATED QUANTITIES OF WORK, SHOWN ON THESE SHEETS IS BASED ON LIMITED INVESTIGATIONS BY THE STATE AND IS IN NO WAY WARRANTED TO INDICATE THE CONDITIONS OF ACTUAL QUANTITIES OF WORK WHICH WILL BE REQUIRED.

DESIGNER/DRAFTER: BW
CHECKED BY: JCM
SCALE AS NOTED

STATE OF CONNECTICUT
DEPARTMENT OF TRANSPORTATION

ENGINEER: OFFICE OF ENGINEERING
APPROVED BY: DATE:

OFFICE OF ENGINEERING

PROJECT TITLE:
ROUTE 148 OVER GREAT BROOK
BR. NO. 02695
BRIDGE REPLACEMENT

TOWN: **CHESTER**

DRAWING TITLE: **STAGE 1 CONSTRUCTION**

PROJECT NO. **26-118**
DRAWING NO. **S-5**
SHEET NO. **06.05**

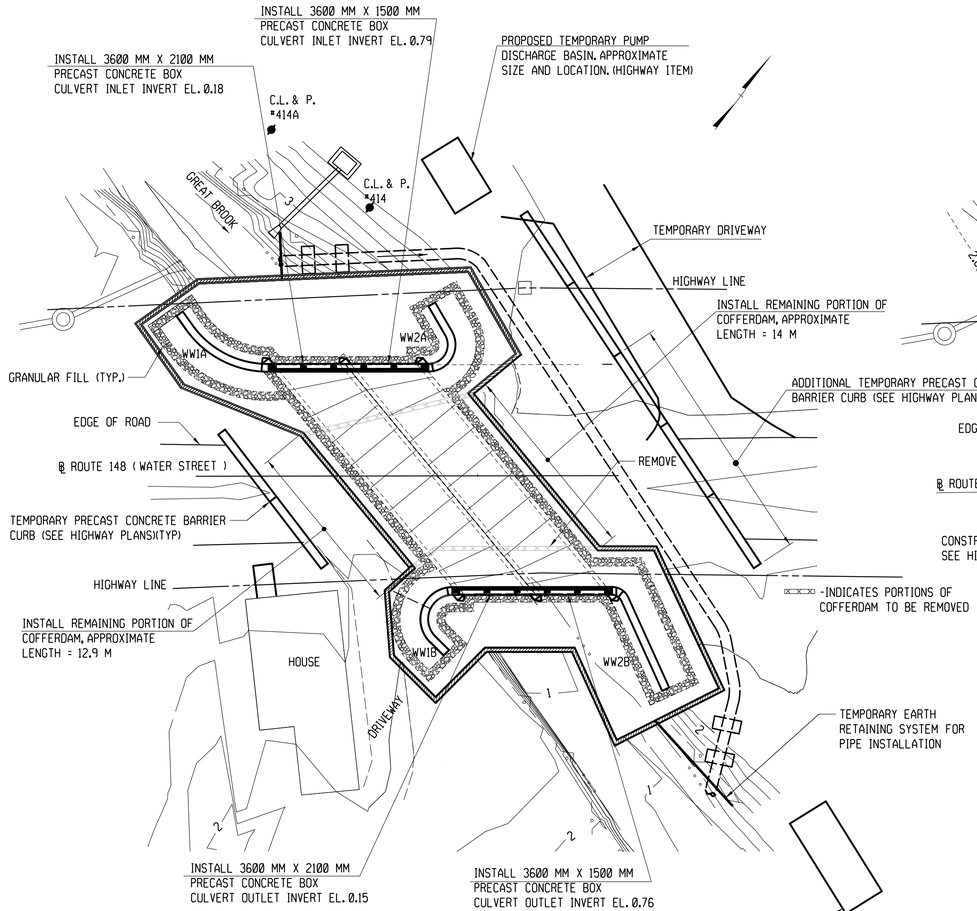

NOTES : THE COST OF REMOVING, STOCKPILING (AT A LOCATION APPROVED BY THE ENGINEER) AND REUSING THE EXISTING STREAM BED MATERIAL SHALL BE PAID FOR UNDER THE ITEM "CHANNEL EXCAVATION - EARTH."

STAGE II CONSTRUCTION

SCALE: 1:200

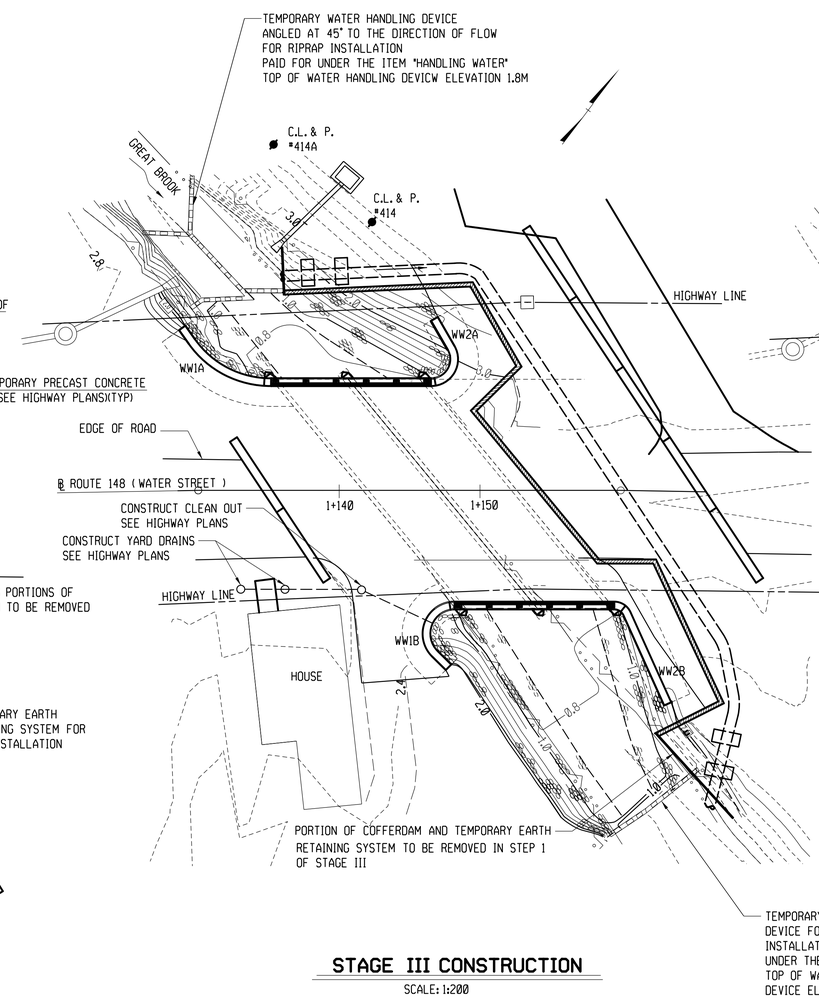

STAGE III CONSTRUCTION

SCALE: 1:200

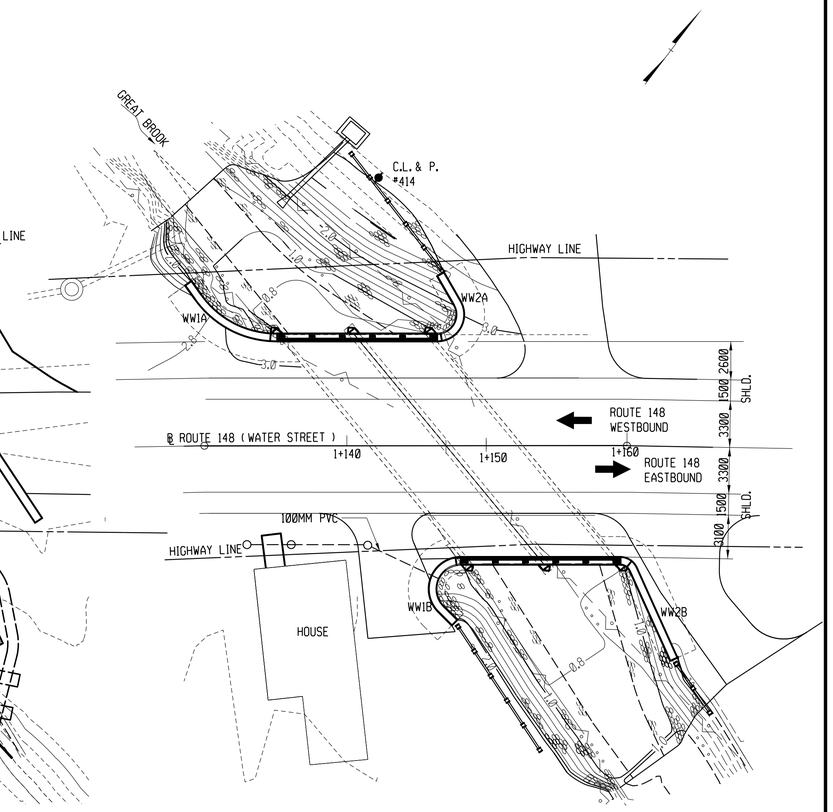

FINAL CONDITION

SCALE: 1:200

STAGE II CONSTRUCTION NOTES

1 - REMOVE TYPE III BARRICADE (HIGHWAY ITEM) ACROSS SOUTHWEST DRIVEWAY. REMOVE TRAFFIC DRUMS ALONG TEMPORARY NORTHEAST DRIVEWAY. REMOVE METAL BEAM RAILS. PLACE ADDITIONAL TEMPORARY PRECAST CONCRETE BARRIER CURB (HIGHWAY ITEM). FOR ROAD CLOSURE PLANS SEE HIGHWAY SHEETS.

2 - INSTALL REMAINING PORTION OF COFFERDAM.

3 - REMOVE THE EXISTING BRIDGE SUPERSTRUCTURE AND SUBSTRUCTURE, PAID FOR UNDER ITEM "REMOVAL OF EXISTING BRIDGE".

4 - REMOVE PORTION OF COFFERDAM THAT RESTRICTS PLACEMENT OF THE BOX CULVERT. EXCAVATE TO REQUIRED ELEVATION AND PLACE GRANULAR FILL FOR THE BOX CULVERTS.

5 - INSTALL BOX CULVERTS AND HEADWALLS AND CONSTRUCT REMAINING PORTION OF WINGWALL STEMS AND CONSTRUCT NOSINGS.

6 - INSTALL 450MM OF NATURAL STREAMBED MATERIAL IN THE 3600MM X 2100MM BOX. SEE NOTICE TO CONTRACTOR.

7 - BACKFILL, INSTALL YARD DRAIN AND 100 MM PVC.

8 - INSTALL TWO-TUBE BRIDGE RAIL.

9 - COMPLETE BACKFILL TO FINISHED ELEVATIONS AND KEY-IN RIPRAP WITHIN COFFERDAM ALONG ALL WINGWALLS.

STAGE III CONSTRUCTION NOTES

1 - REMOVE TEMPORARY PUMP DISCHARGE BASINS. REMOVE PORTION OF TEMPORARY EARTH RETAINING SYSTEM. REMOVE COFFERDAM AT OUTLET FOR PLACEMENT OF RIPRAP. INSTALL TEMPORARY WATER HANDLING DEVICE, INSTALL RIPRAP AT OUTLET. REMOVE TEMPORARY WATER HANDLING DEVICE.

2 - REMOVE PORTION OF COFFERDAM AT INLET FOR PLACEMENT OF RIPRAP. ALLOW FLOW INTO THE BOX CULVERT. PLACE TEMPORARY WATER HANDLING DEVICE FOR RIPRAP INSTALLATION AT WINGWALL 1A. COMPLETE RIPRAP INSTALLATION AT WINGWALL 1A. REMOVE PORTION OF TEMPORARY WATER HANDLING DEVICE.

3 - REMOVE TEMPORARY PIPE WITH MANNING'S COEFFICIENT OF 0.013 AND REMAINING PORTION OF COFFERDAM AND TEMPORARY EARTH RETAINING SYSTEM THEN BACKFILL.

4 - INSTALL TEMPORARY WATER HANDLING DEVICE AT WINGWALL 2A FOR PLACEMENT OF REMAINING RIPRAP. INSTALL RIPRAP THEN REMOVE TEMPORARY WATER HANDLING DEVICE.

5 - CONSTRUCT ROADWAY, INSTALL APPURTENANCES AND REMOVE TEMPORARY BARRIERS.

6 - PERFORM A POST-CONSTRUCTION CONDITION SURVEY.

REV.	DATE	REVISION DESCRIPTION	SHEET NO.

Filename: Border Version: 6/1/05

THE INFORMATION, INCLUDING ESTIMATED QUANTITIES OF WORK, SHOWN ON THESE SHEETS IS BASED ON LIMITED INVESTIGATIONS BY THE STATE AND IS IN NO WAY WARRANTED TO INDICATE THE CONDITIONS OF ACTUAL QUANTITIES OF WORK WHICH WILL BE REQUIRED.

DESIGNER/DRAFTER: BW
CHECKED BY: JCM
SCALE AS NOTED

STATE OF CONNECTICUT
DEPARTMENT OF TRANSPORTATION

ENGINEER: OFFICE OF ENGINEERING
APPROVED BY: DATE:

OFFICE OF ENGINEERING

PROJECT TITLE:
ROUTE 148 OVER GREAT BROOK
BR. NO. 02695
BRIDGE REPLACEMENT

TOWN: CHESTER

DRAWING TITLE: STAGE II AND III CONSTRUCTION

PROJECT NO. 26-118
DRAWING NO. S-6
SHEET NO. 06.06

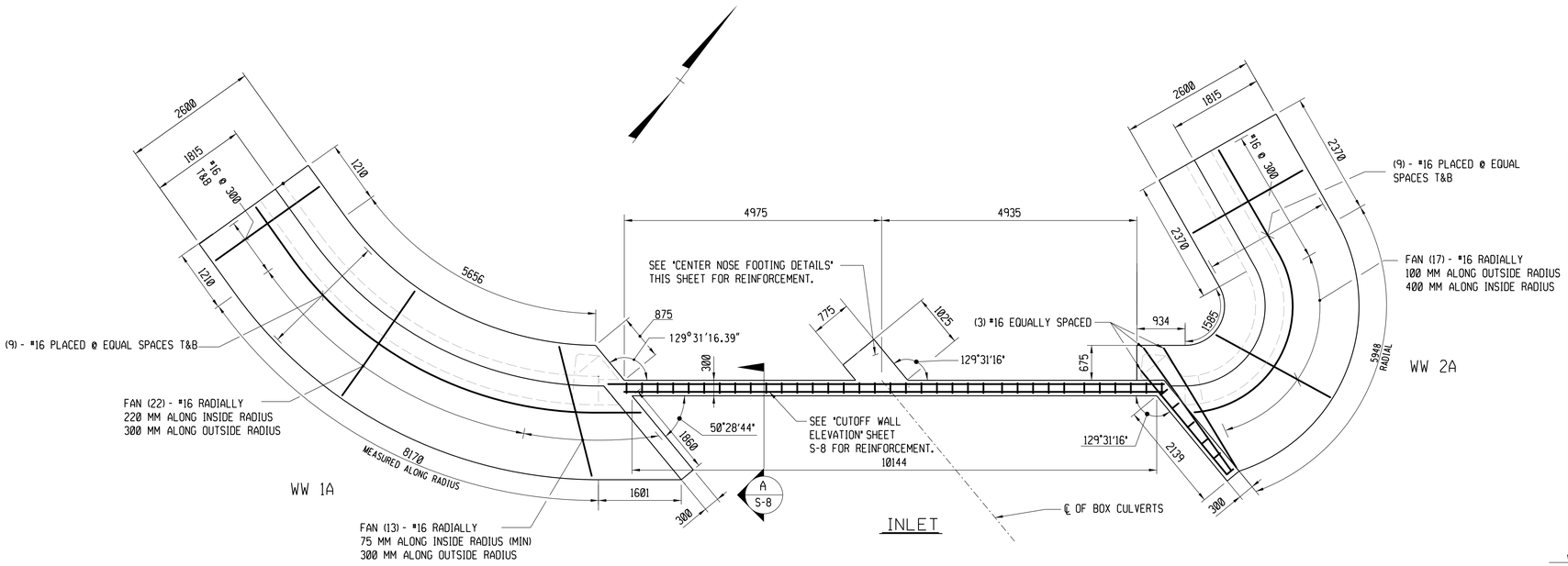

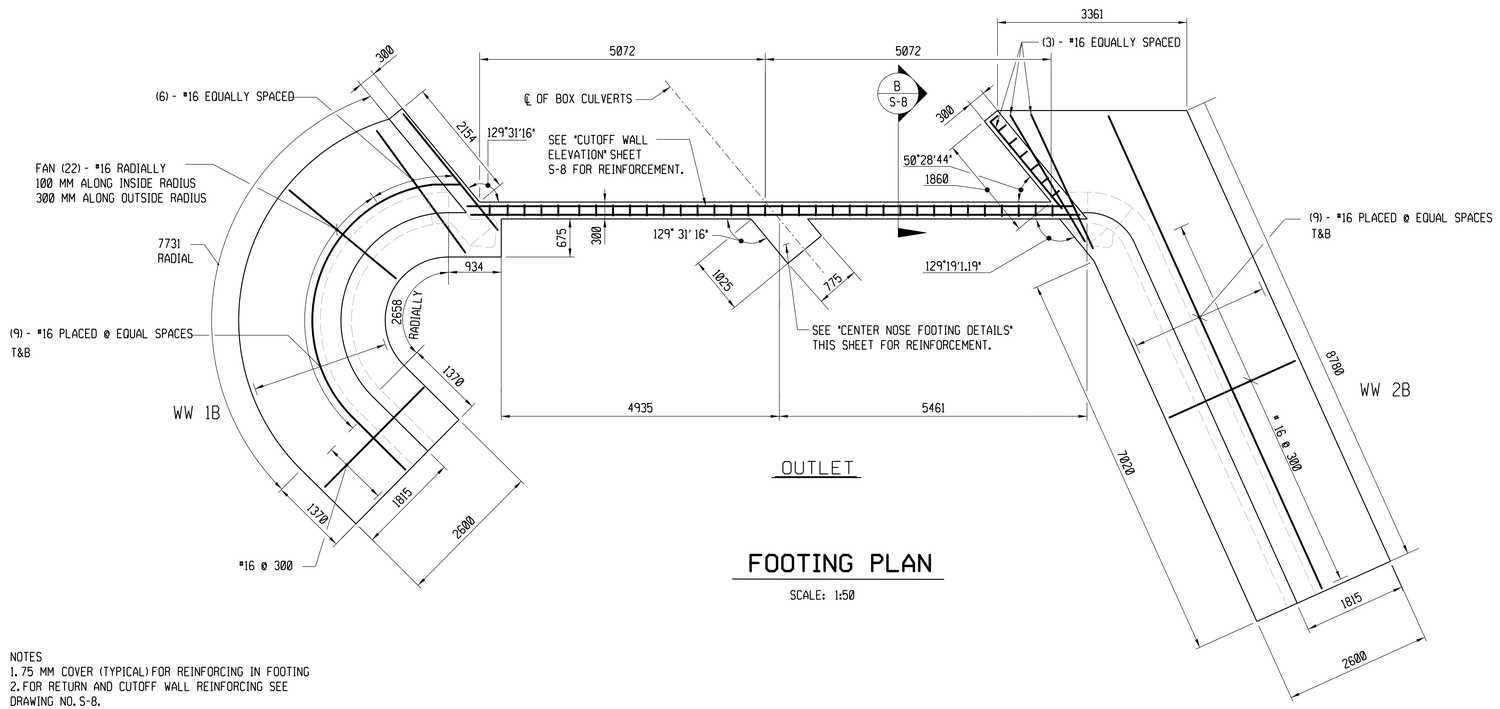

FOOTING PLAN

SCALE: 1:50

NOTES
1. 75 MM COVER (TYPICAL) FOR REINFORCING IN FOOTING
2. FOR RETURN AND CUTOFF WALL REINFORCING SEE DRAWING NO. S-8.
3. FOR LAYOUT PLAN SEE DRAWING NO. S-2.

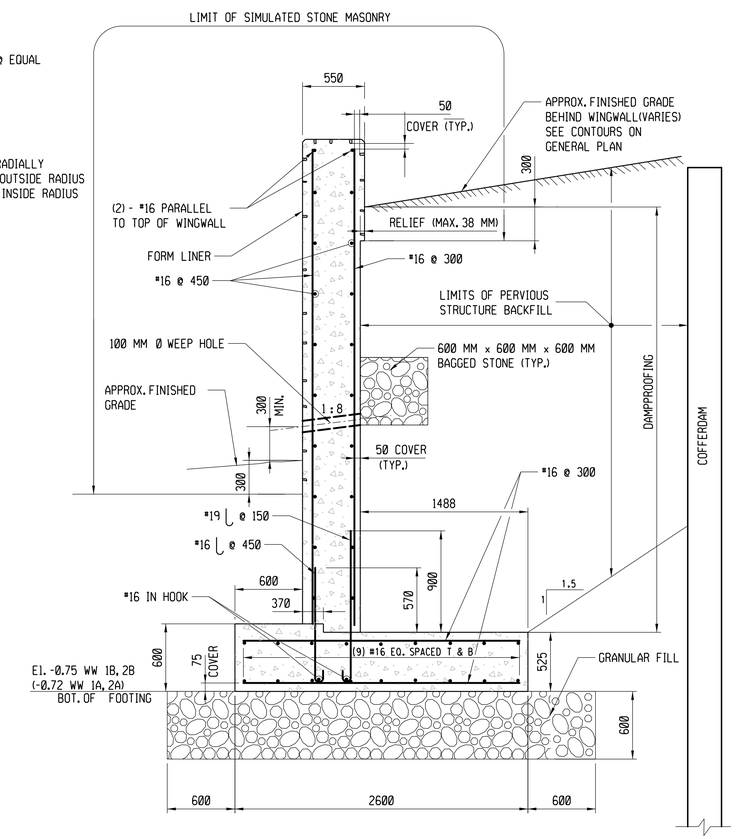

TYPICAL WINGWALL SECTION

SCALE: 1:25

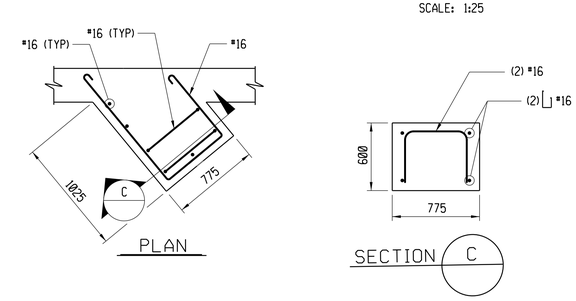

CENTER NOSE FOOTING DETAILS

SCALE: 1:25

REV.	DATE	REVISION DESCRIPTION	SHEET NO.

Filename: Border Version: 6/1/05

THE INFORMATION, INCLUDING ESTIMATED QUANTITIES OF WORK, SHOWN ON THESE SHEETS IS BASED ON LIMITED INVESTIGATIONS BY THE STATE AND IS IN NO WAY WARRANTED TO INDICATE THE CONDITIONS OF ACTUAL QUANTITIES OF WORK WHICH WILL BE REQUIRED.

DESIGNER/DRAFTER: BW
CHECKED BY: JCM
SCALE AS NOTED

STATE OF CONNECTICUT
DEPARTMENT OF TRANSPORTATION

ENGINEER: OFFICE OF ENGINEERING
APPROVED BY: -
DATE: -

OFFICE OF ENGINEERING

PROJECT TITLE:
ROUTE 148 OVER GREAT BROOK
BR. NO. 02695
BRIDGE REPLACEMENT

TOWN: CHESTER

DRAWING TITLE:
FOOTING PLAN AND
TYPICAL WINGWALL SECTION

PROJECT NO. 26-118
DRAWING NO. S-7
SHEET NO. 06.07

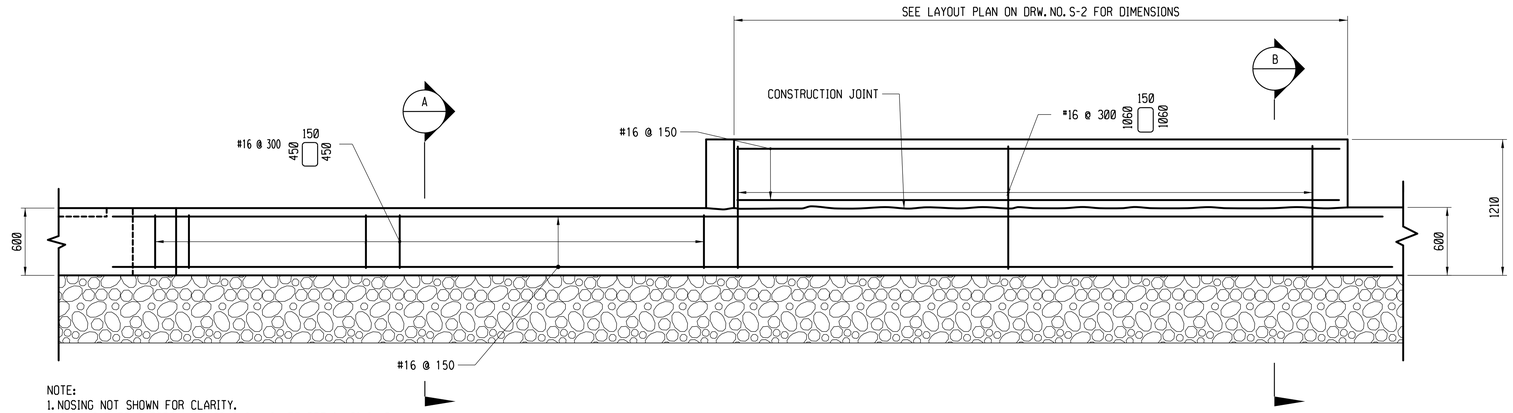

NOTE:
1. NOSING NOT SHOWN FOR CLARITY.
2. ONLY OUTLET CUTOFF WALL IS SHOWN, INLET DETAIL SIMILAR.

CUTOFF WALL ELEVATION

SCALE: 1:25

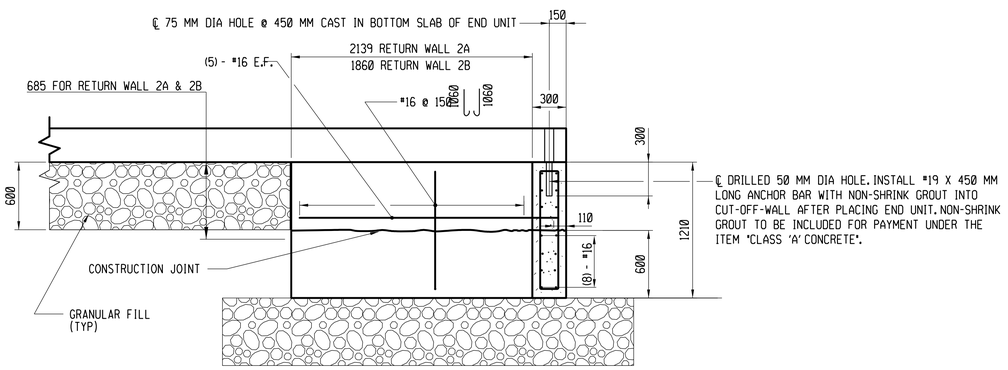

RETURN AND CUTOFF WALL FOR 3600 X 1500 BOX CULVERT - SECTION B

SCALE: 1:25

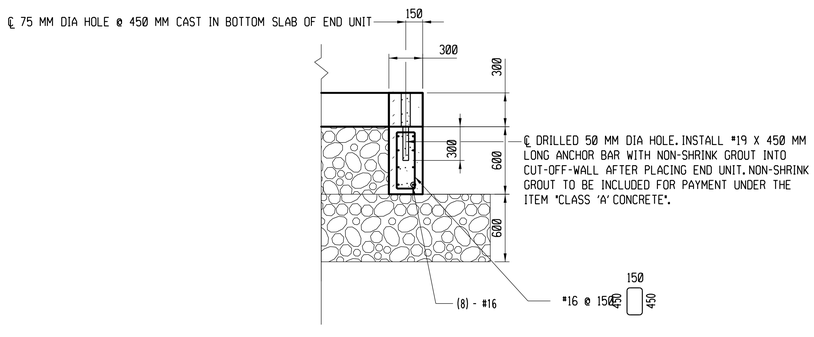

CUTOFF WALL FOR 3600 X 2100 BOX CULVERT - SECTION A

SCALE: 1:25

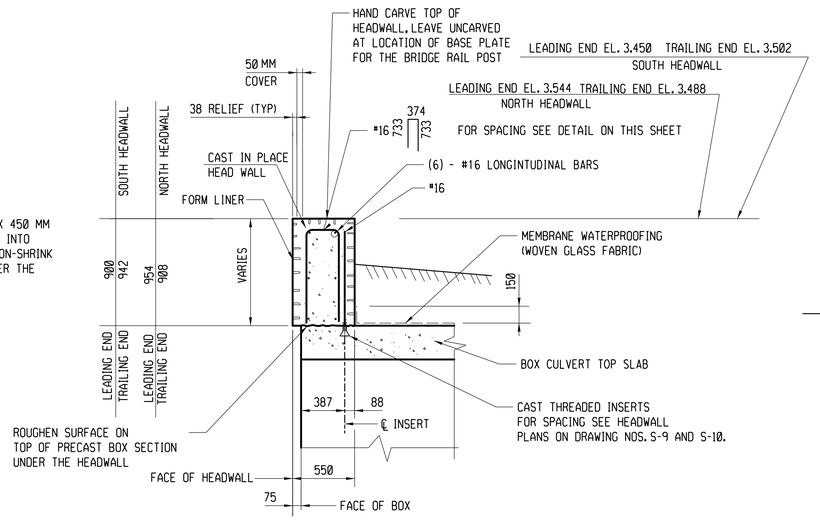

TYPICAL HEADWALL SECTION

SCALE: 1:25

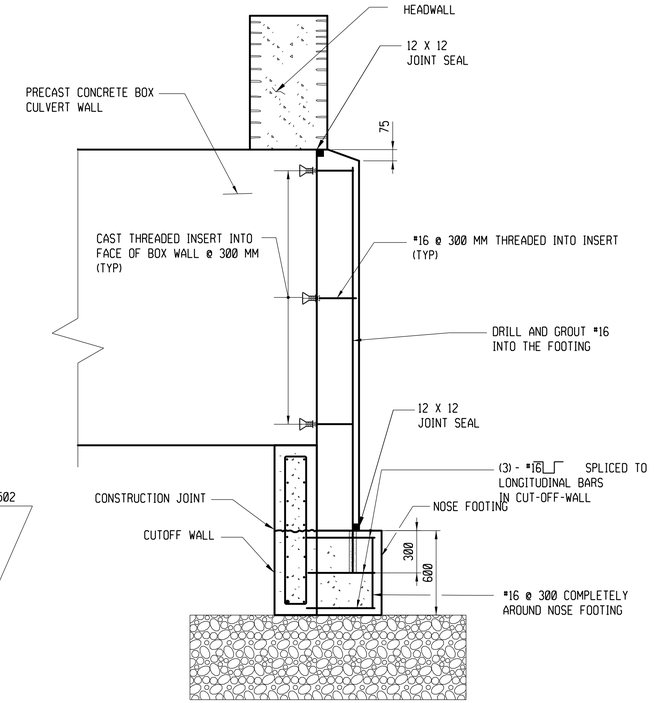

NOSE AND FOOTING DETAIL BETWEEN BOX SECTIONS

SCALE: 1:20

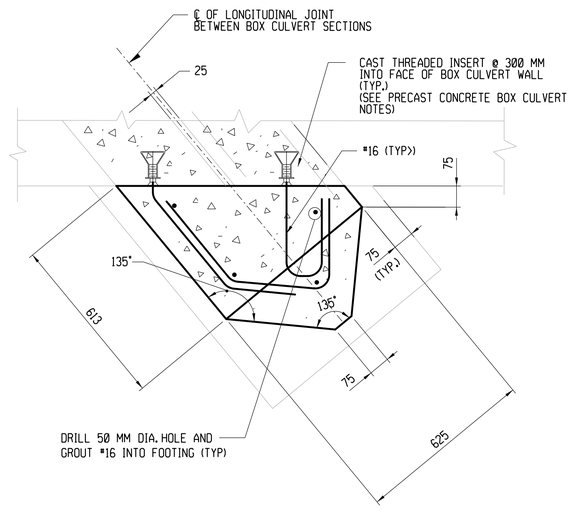

NOSE SECTION BETWEEN BOX SECTIONS

SCALE: 1:10

PRECAST CONCRETE BOX CULVERT NOTES

1. THE CONTRACTOR SHALL DESIGN, MANUFACTURE AND CONSTRUCT THE PRECAST CONCRETE BOX CULVERTS IN ACORDANCE WITH THE SPECIAL PROVISIONS FOR "3600 MM X 1500 MM PRECAST CONCRETE BOX CULVERT" AND "3600 MM X 2100 MM PRECAST CONCRETE BOX CULVERT" AND THE DIMENSIONS, LENGTH AND DETAILS SHOWN ON THESE PLANS.
2. ALL INSERTS OR HOLES CAST INTO THE CULVERT SECTIONS FOR THE SOLE PURPOSE OF HANDLING AND SETTING THE UNITS SHALL BE GROUTED OVER TO A SMOOTH FINISH UPON COMPLETION OF THE WORK.
3. NON-SHRINK GROUT SHALL BE USED TO GROUT THE REINFORCEMENT.
4. THE COST OF FURNISHING AND INSTALLING INSERTS SHALL BE INCLUDED IN THE ITEMS "3600 MM X 1500 MM PRECAST CONCRETE BOX CULVERT" AND "3600 MM X 2100 MM PRECAST CONCRETE BOX CULVERT". INSERT SHALL BE GALVANIZED IN ACCORDANCE WITH ASTM A153 OR ASTM B695, GRADE 350, OR BE STAINLESS STEEL.
5. THE #16 BARS WITH THREADED END SHALL BE COMPATIBLE WITH THE THREADED INSERTS (SEE NOTE 4). THREADS SHALL BE LONG ENOUGH TO FULLY ENGAGE THE INSERTS. THE THREADED BARS SHALL CONFORM TO THE REQUIREMENTS OF ASTM A615M, GRADE 240.
6. ALL REINFORCEMENT TO HAVE 50 MM COVER UNLESS OTHERWISE NOTED.

REV.	DATE	REVISION DESCRIPTION	SHEET NO.

Filename: Border Version: 6/1/05

THE INFORMATION, INCLUDING ESTIMATED QUANTITIES OF WORK, SHOWN ON THESE SHEETS IS BASED ON LIMITED INVESTIGATIONS BY THE STATE AND IS IN NO WAY WARRANTED TO INDICATE THE CONDITIONS OF ACTUAL QUANTITIES OF WORK WHICH WILL BE REQUIRED.

DESIGNER/DRAFTER: BW
CHECKED BY: JCM
SCALE AS NOTED

STATE OF CONNECTICUT
DEPARTMENT OF TRANSPORTATION

ENGINEER: OFFICE OF ENGINEERING
APPROVED BY: DATE:

OFFICE OF ENGINEERING

PROJECT TITLE:
ROUTE 148 OVER GREAT BROOK
BR. NO. 02695
BRIDGE REPLACEMENT

TOWN: CHESTER

DRAWING TITLE: BOX CULVERT DETAILS

PROJECT NO. 26-118
DRAWING NO. S-8
SHEET NO. 06.08

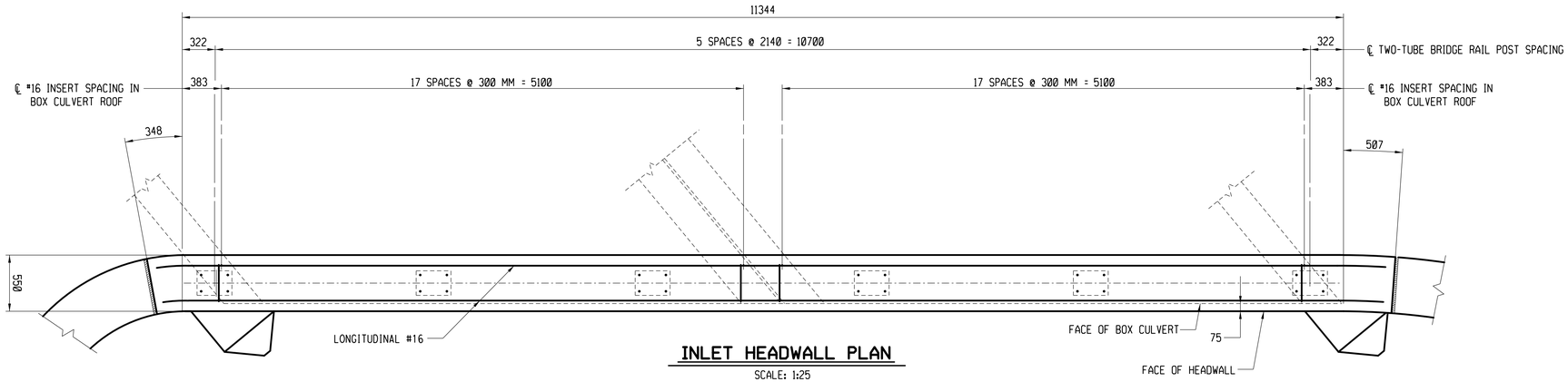

INLET HEADWALL PLAN

SCALE: 1:25

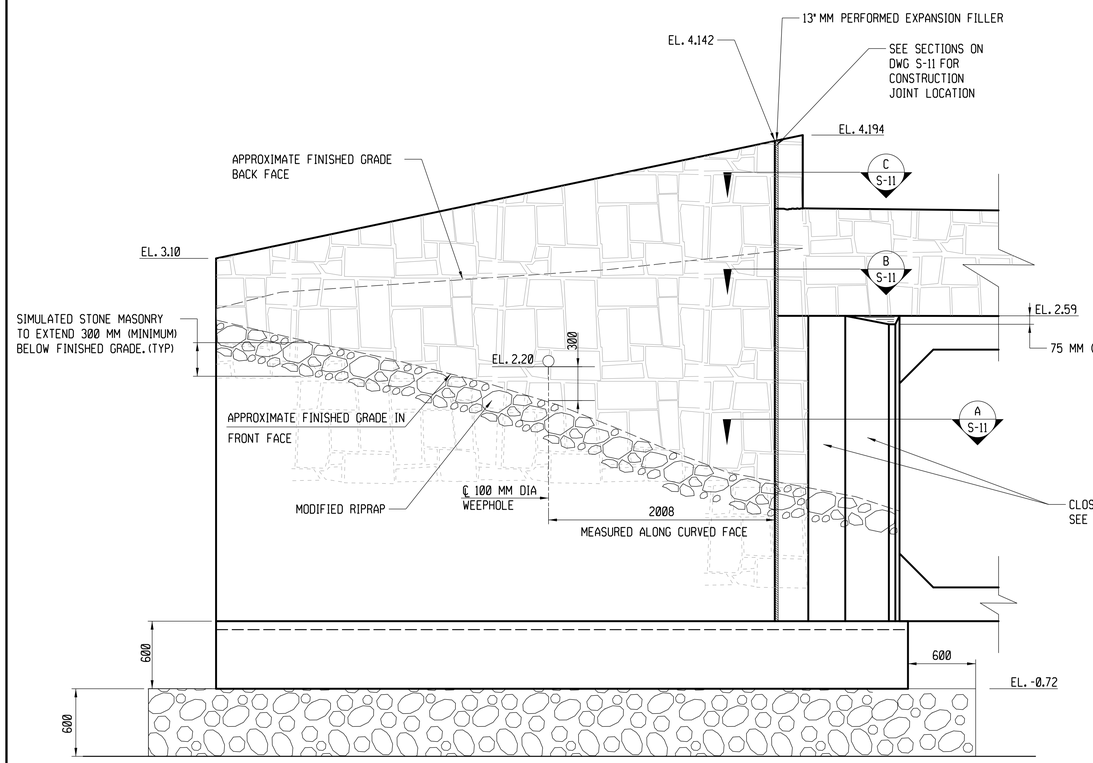

DEVELOPED ELEVATION - WINGWALL 2A

SCALE: 1:25

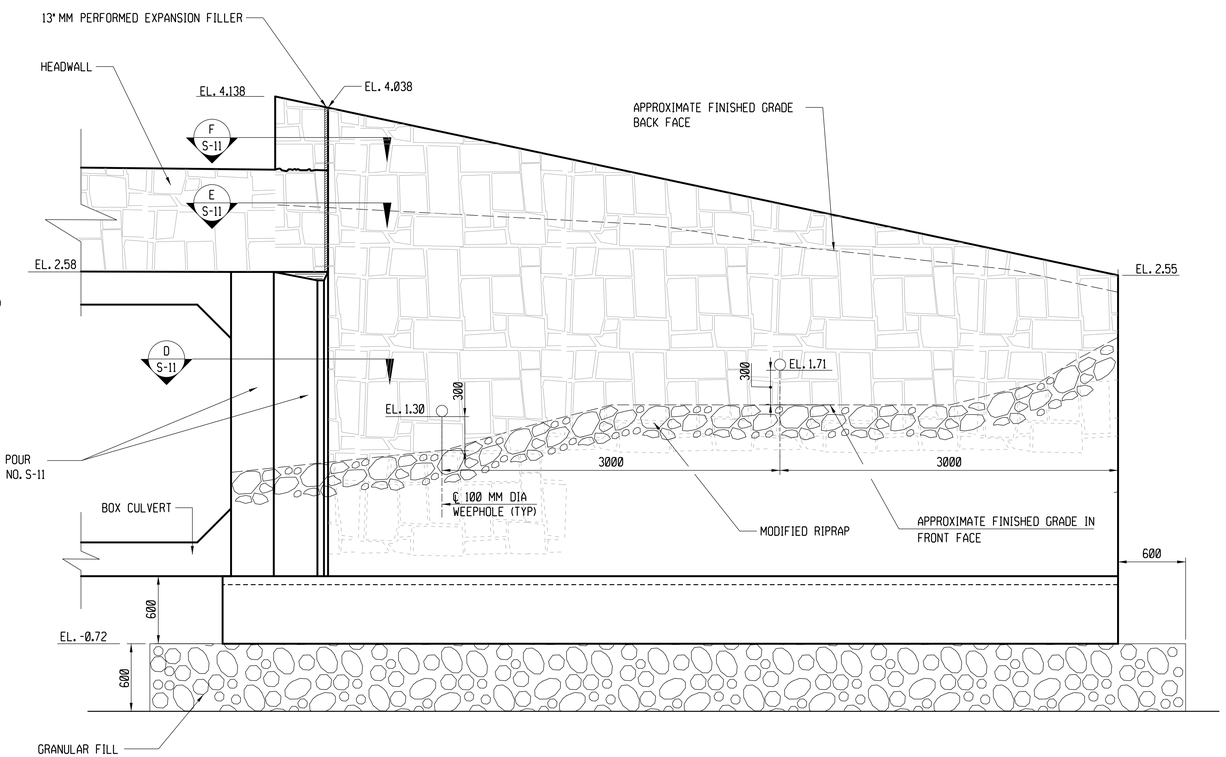

DEVELOPED ELEVATION - WINGWALL 1A

SCALE: 1:25

DESIGN FOUNDATION PRESSURES

STRENGTH LIMIT STATE

Maximum design foundation pressure = 128 kPa

SERVICE LIMIT STATE

Maximum design foundation pressure = 92 kPa

REV.	DATE	REVISION DESCRIPTION	SHEET NO.

Filename: Border Version: 6/1/05

THE INFORMATION, INCLUDING ESTIMATED QUANTITIES OF WORK, SHOWN ON THESE SHEETS IS BASED ON LIMITED INVESTIGATIONS BY THE STATE AND IS IN NO WAY WARRANTED TO INDICATE THE CONDITIONS OF ACTUAL QUANTITIES OF WORK WHICH WILL BE REQUIRED.

DESIGNER/DRAFTER: BW

CHECKED BY: JCM

SCALE AS NOTED

STATE OF CONNECTICUT
DEPARTMENT OF TRANSPORTATION

ENGINEER: OFFICE OF ENGINEERING

APPROVED BY: - DATE: -

OFFICE OF ENGINEERING

PROJECT TITLE:
ROUTE 148 OVER GREAT BROOK
BR. NO. 02695
BRIDGE REPLACEMENT

TOWN: CHESTER

DRAWING TITLE: INLET WINGWALL DETAILS

PROJECT NO. 26-118

DRAWING NO. S-9

SHEET NO. 06.09

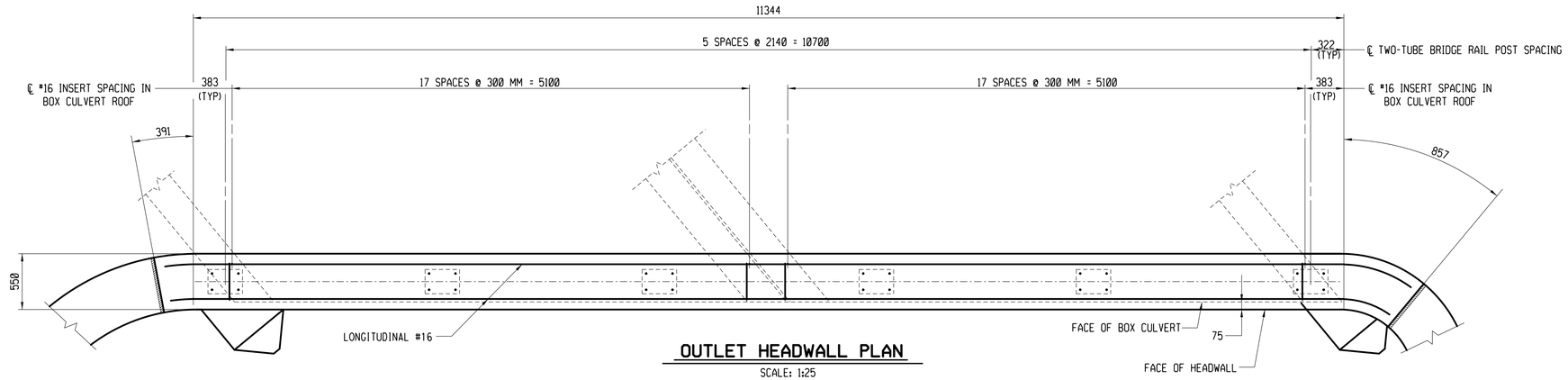

OUTLET HEADWALL PLAN

SCALE: 1:25

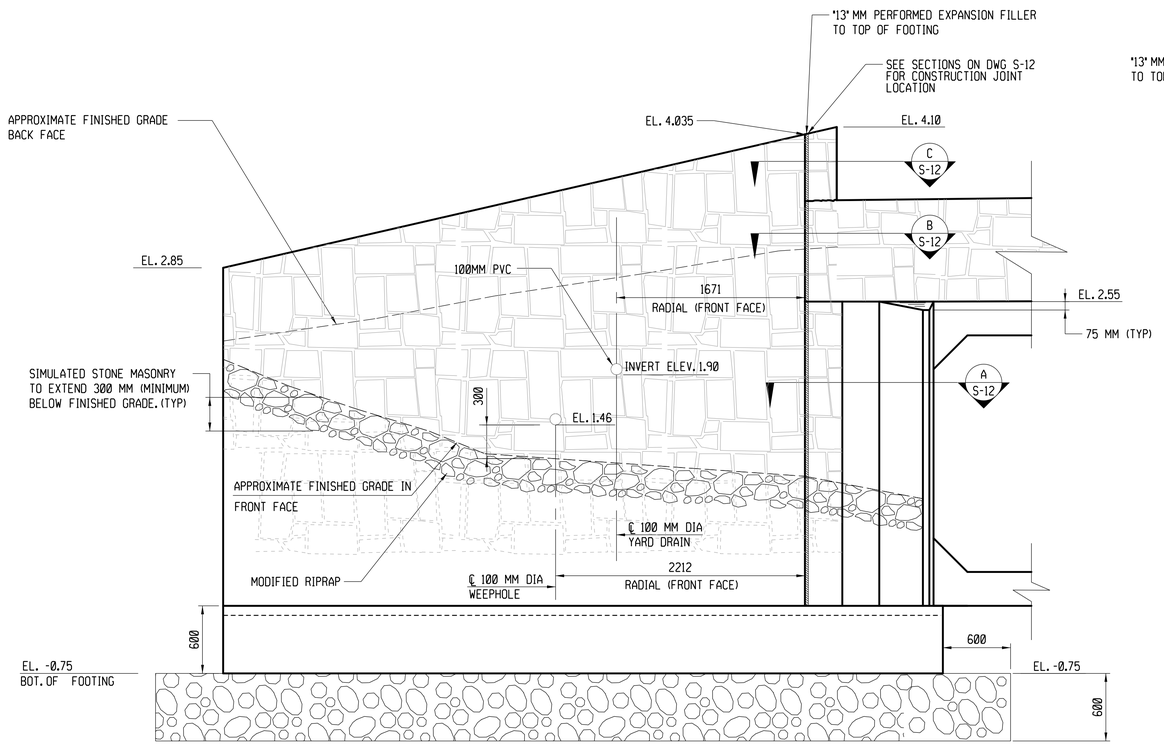

DEVELOPED ELEVATION - WINGWALL 1B

SCALE: 1:25

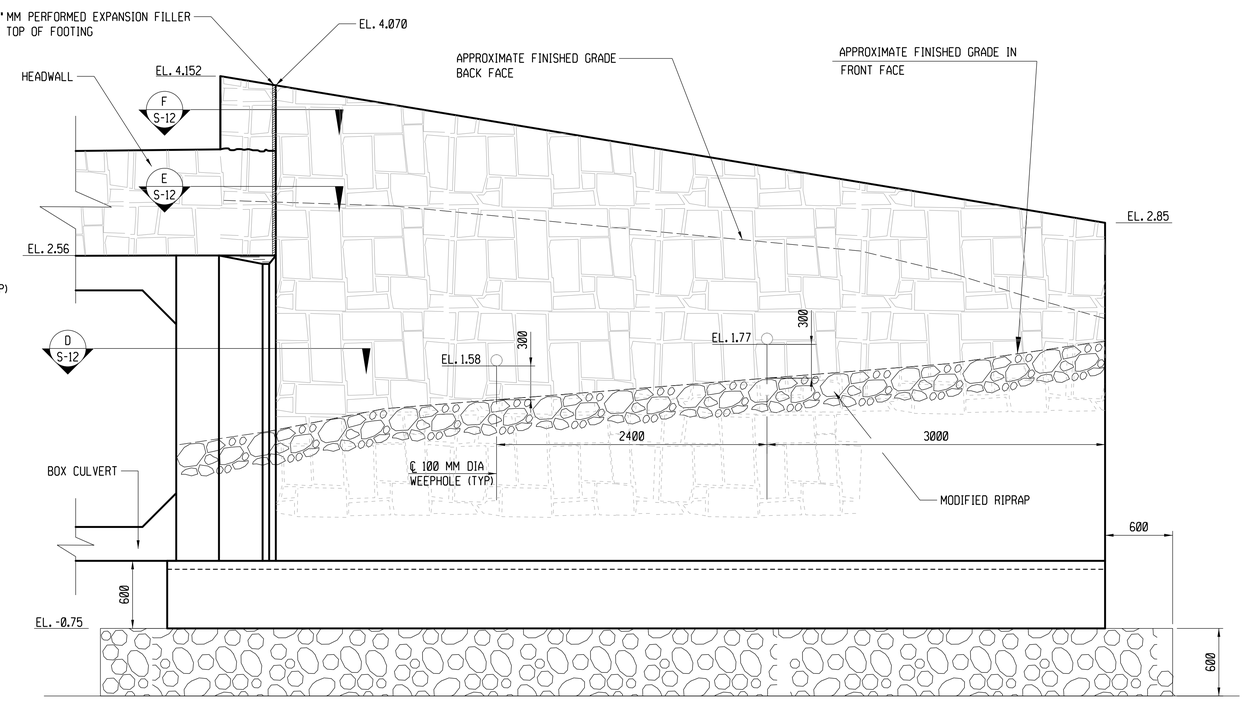

DEVELOPED ELEVATION - WINGWALL 2B

SCALE: 1:25

DESIGN FOUNDATION PRESSURES

STRENGTH LIMIT STATE
Maximum design foundation pressure = 128 kPa

SERVICE LIMIT STATE
Maximum design foundation pressure = 92 kPa

REV.	DATE	REVISION DESCRIPTION	SHEET NO.

Filename: Border Version: 6/1/05

THE INFORMATION, INCLUDING ESTIMATED QUANTITIES OF WORK, SHOWN ON THESE SHEETS IS BASED ON LIMITED INVESTIGATIONS BY THE STATE AND IS IN NO WAY WARRANTED TO INDICATE THE CONDITIONS OF ACTUAL QUANTITIES OF WORK WHICH WILL BE REQUIRED.

DESIGNER/DRAFTER: BW
CHECKED BY: JCM
SCALE AS NOTED

STATE OF CONNECTICUT
DEPARTMENT OF TRANSPORTATION

ENGINEER: OFFICE OF ENGINEERING
APPROVED BY: -
DATE: -

OFFICE OF ENGINEERING

PROJECT TITLE:
ROUTE 148 OVER GREAT BROOK
BR. NO. 02695
BRIDGE REPLACEMENT

TOWN: CHESTER

DRAWING TITLE:
OUTLET
WINGWALL DETAILS

PROJECT NO. 26-118
DRAWING NO. S-10
SHEET NO. 06.010

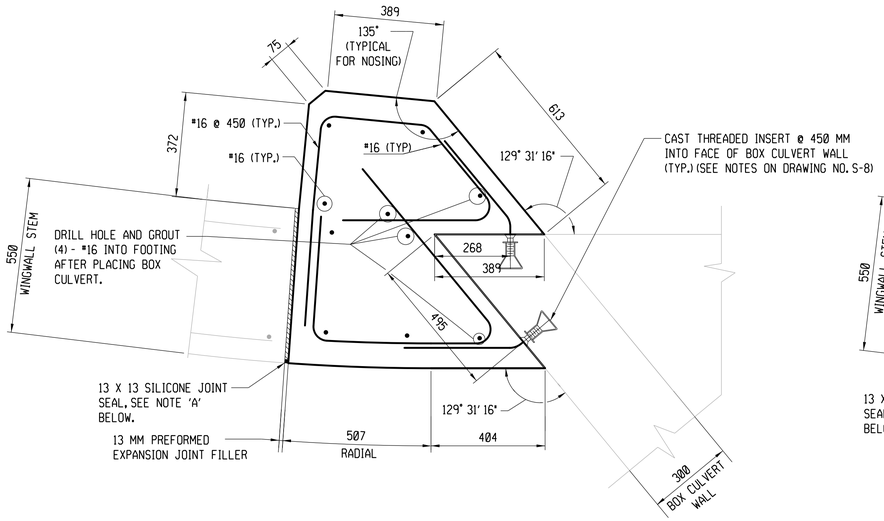

SECTION A / S-9
SCALE: 1:10

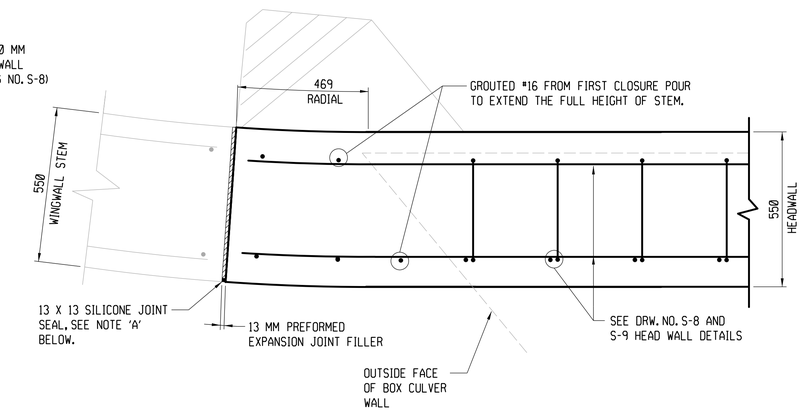

SECTION B / S-9
SCALE: 1:10

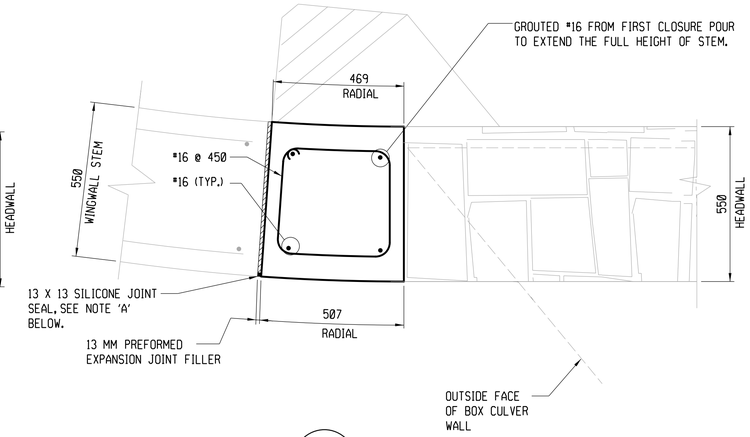

SECTION C / S-9
SCALE: 1:10

WINGWALL 1A NOSING/CLOSURE POUR DETAIL

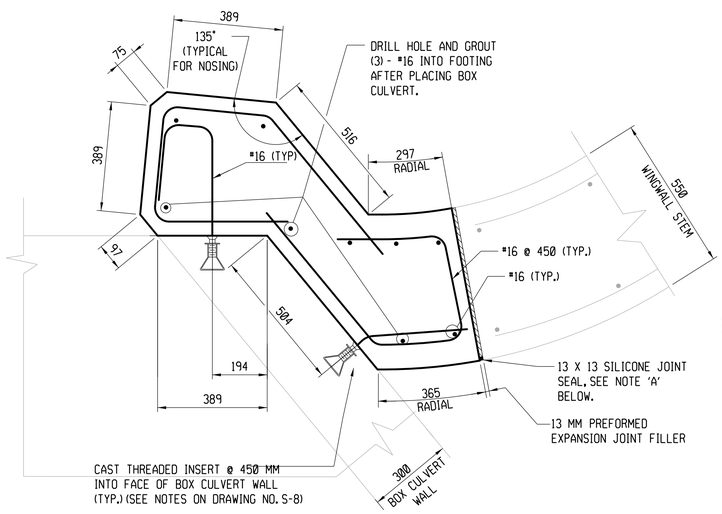

SECTION D / S-9
SCALE: 1:10

NOTE 'A': SILICONE JOINT SEAL TO EXTEND FROM TOP OF FOOTING TO TOP OF WINGWALL AND HORIZONTALLY ALONG THIS JOINT TO OUTSIDE FACE OF WINGWALL.

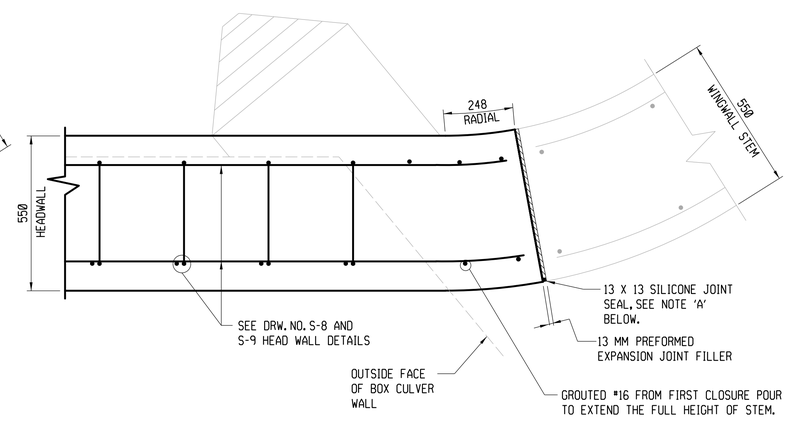

SECTION E / S-9
SCALE: 1:10

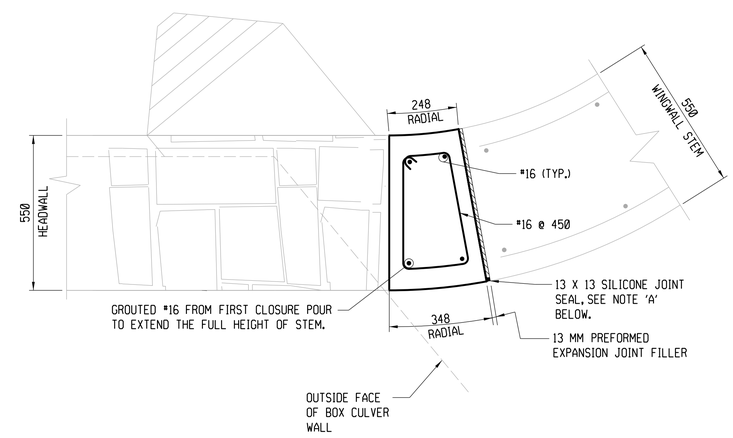

SECTION F / S-9
SCALE: 1:10

WINGWALL 2A NOSING/CLOSURE POUR DETAIL

REV.	DATE	REVISION DESCRIPTION	SHEET NO.

Filename: Border Version: 6/1/05

THE INFORMATION, INCLUDING ESTIMATED QUANTITIES OF WORK, SHOWN ON THESE SHEETS IS BASED ON LIMITED INVESTIGATIONS BY THE STATE AND IS IN NO WAY WARRANTED TO INDICATE THE CONDITIONS OF ACTUAL QUANTITIES OF WORK WHICH WILL BE REQUIRED.

DESIGNER/DRAFTER: BW
CHECKED BY: JCM
SCALE AS NOTED

STATE OF CONNECTICUT
DEPARTMENT OF TRANSPORTATION

ENGINEER: OFFICE OF ENGINEERING
APPROVED BY: DATE:

OFFICE OF ENGINEERING

PROJECT TITLE:
ROUTE 148 OVER GREAT BROOK
BR. NO. 02695
BRIDGE REPLACEMENT

TOWN: **CHESTER**

DRAWING TITLE: **NOSING AND CLOSURE POUR DETAILS I**

PROJECT NO. **26-118**
DRAWING NO. **S-11**
SHEET NO. **06.011**

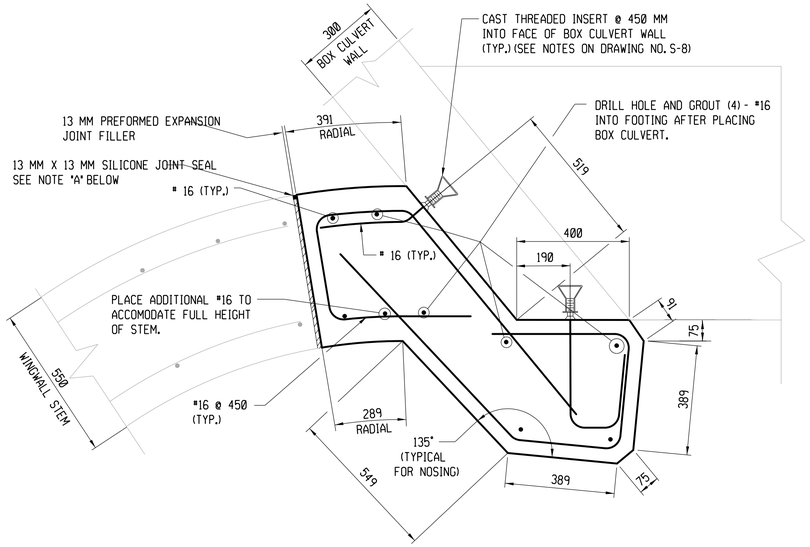

SECTION A / S-10
SCALE: 1:10

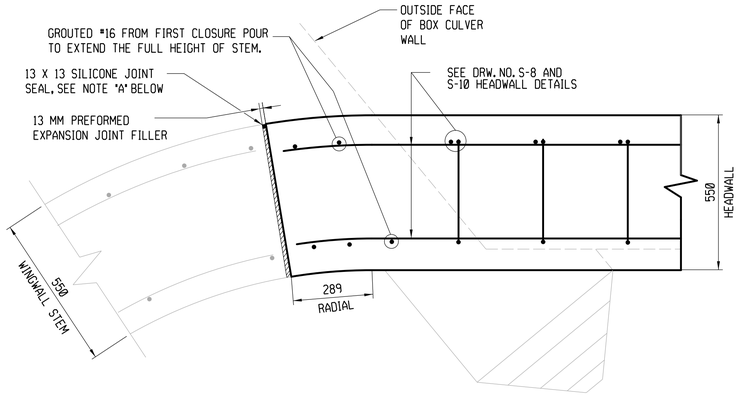

SECTION B / S-10
SCALE: 1:10

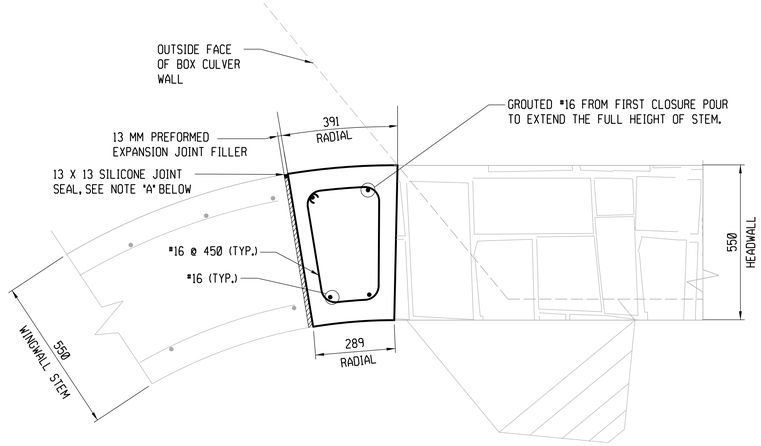

SECTION C / S-10
SCALE: 1:10

WINGWALL 1B NOSING/CLOSURE POUR DETAIL

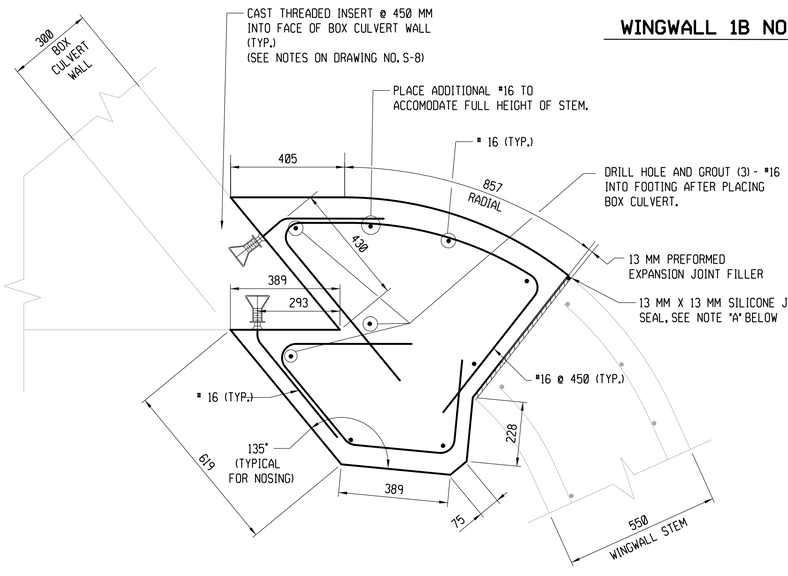

SECTION D / S-10
SCALE: 1:10

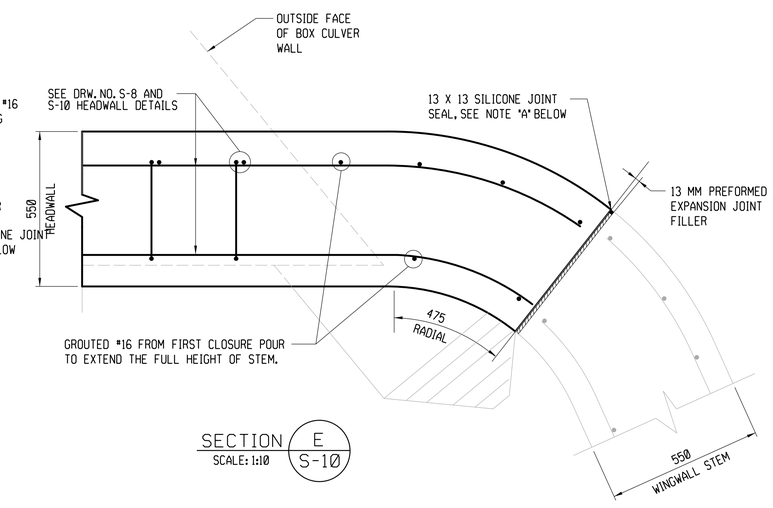

SECTION E / S-10
SCALE: 1:10

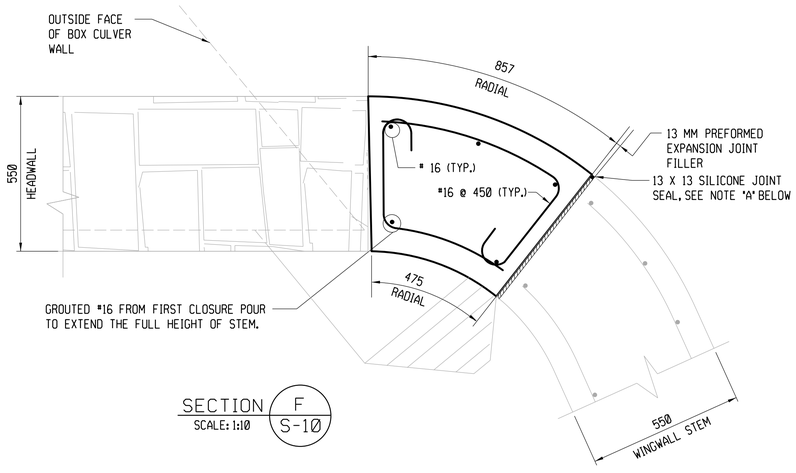

SECTION F / S-10
SCALE: 1:10

WINGWALL 2B NOSING/CLOSURE POUR DETAIL

NOTE "A": SILICONE JOINT SEAL TO EXTEND FROM TOP OF FOOTING TO TOP OF WINGWALL AND HORIZONTALLY ALONG THIS JOINT TO OUTSIDE FACE OF WINGWALL

REV.	DATE	REVISION DESCRIPTION	SHEET NO.

Filename: Border Version: 6/1/05

THE INFORMATION, INCLUDING ESTIMATED QUANTITIES OF WORK, SHOWN ON THESE SHEETS IS BASED ON LIMITED INVESTIGATIONS BY THE STATE AND IS IN NO WAY WARRANTED TO INDICATE THE CONDITIONS OF ACTUAL QUANTITIES OF WORK WHICH WILL BE REQUIRED.

DESIGNER/DRAFTER: BW
CHECKED BY: JCM
SCALE AS NOTED

STATE OF CONNECTICUT
DEPARTMENT OF TRANSPORTATION
ENGINEER: OFFICE OF ENGINEERING
APPROVED BY: DATE:

OFFICE OF ENGINEERING

PROJECT TITLE: ROUTE 148 OVER GREAT BROOK BR. NO. 02695 BRIDGE REPLACEMENT

TOWN: CHESTER

DRAWING TITLE: NOSING AND CLOSURE POUR DETAILS II

PROJECT NO. 26-118
DRAWING NO. S-12
SHEET NO. 06.012

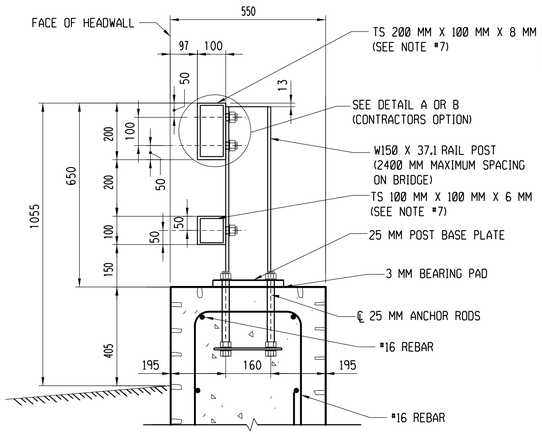

SECTION VIEW

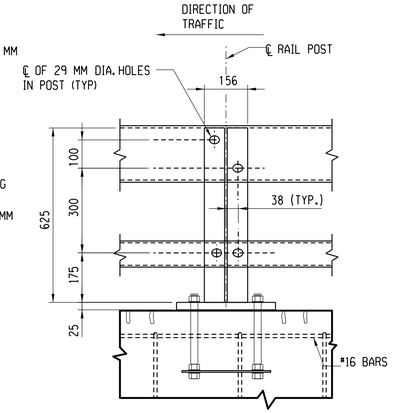

BACK ELEVATION

POST ASSEMBLY
SCALE: 1:10

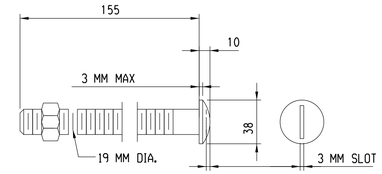

A325M BOLT DETAIL
SCALE: 1:5

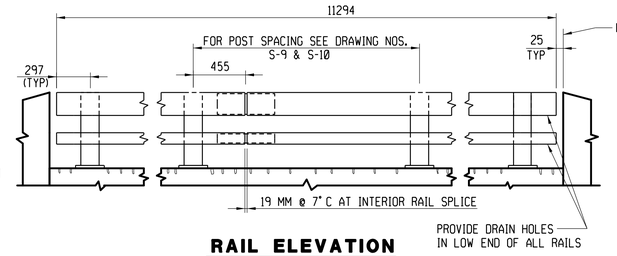

RAIL ELEVATION
SCALE: 1:25

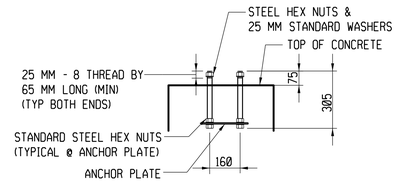

POST ANCHOR ASSEMBLY
SCALE: 1:15

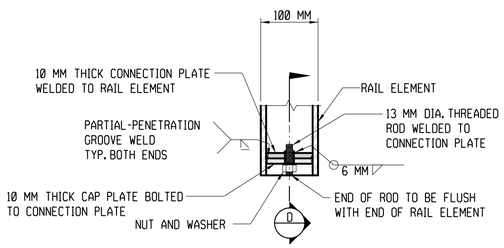

TYPICAL DETAIL-BRIDGE RAIL END

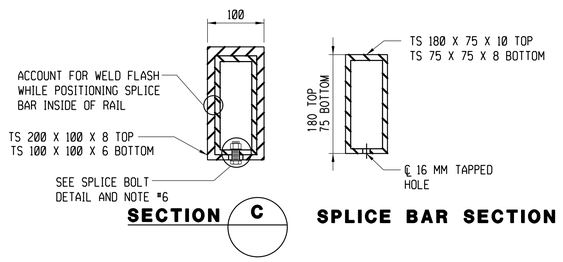

SECTION C

SPLICE BAR SECTION

RAIL SPLICE DETAILS
SCALE: 1:5

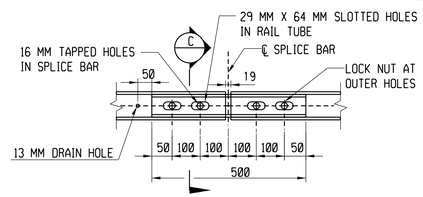

RAIL SPLICE (BOTTOM VIEW)
SCALE: 1:10

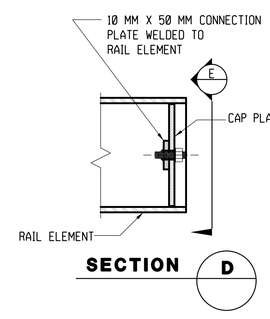

SECTION D

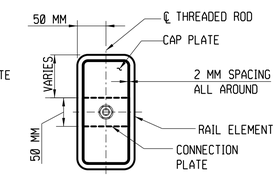

VIEW E

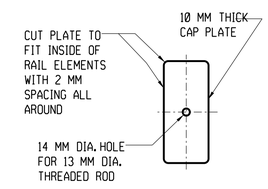

CAP PLATE

CAP PLATE DETAILS
SCALE: 1:5

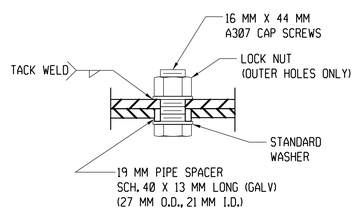

SPLICE BOLT DETAIL
N.T.S.

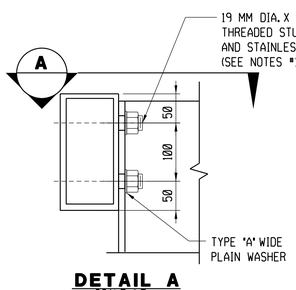

DETAIL A
SCALE: 1:5

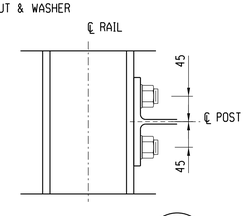

VIEW A
SCALE: 1:5

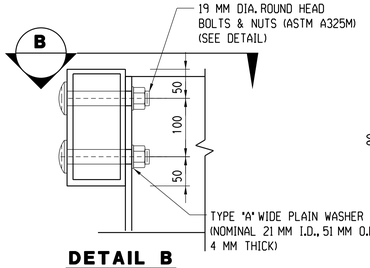

DETAIL B
SCALE: 1:5

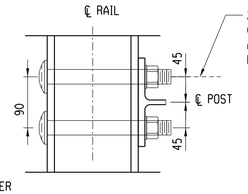

VIEW B
SCALE: 1:5

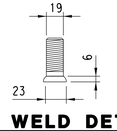

STUD WELD DETAIL
SCALE: 1:10

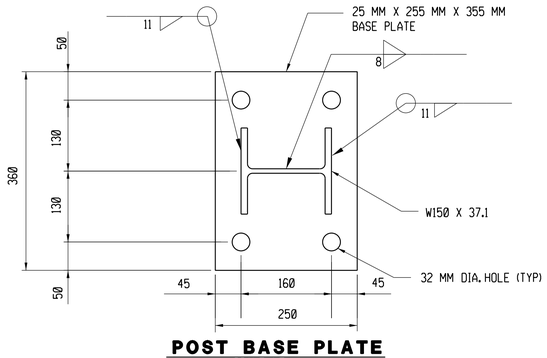

POST BASE PLATE
SCALE: 1:5

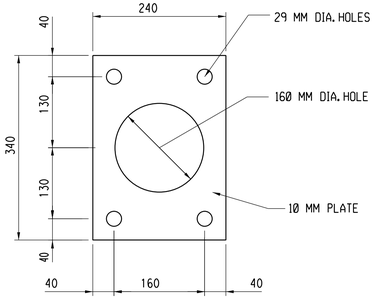

ANCHOR PLATE
SCALE: 1:5

RAIL NOTES

(1) TWO-TUBE BRIDGE RAIL, SHALL INCLUDE POSTS, BASE PLATES, ANCHOR PLATES, ANCHOR RODS, PREFORMED PADS, RAIL ASSEMBLY BOLTS, NUTS, WASHERS, STUDS, STRUCTURAL TUBING, SPLICE BARS, PIPE SPACERS, ALL APPURTENANCES, AND GALVANIZING.

(2) BRIDGE RAIL POSTS SHALL BE SET NORMAL (90 DEGREES) TO THE PROFILE GRADE, EXCEPT ON GRADES OVER 5% WHERE POSTS SHALL BE SET VERTICAL.

(3) ENDS OF RAIL TUBE SECTIONS SHALL BE SAWED OR MILLED AND SHALL BE TRUE AND SMOOTH. ALL CUT EDGES OF ALL MATERIAL SHALL BE GROUND SMOOTH.

(4) EACH PIECE OF RAIL TUBING SHALL BE ATTACHED TO A MINIMUM OF THREE (3) POSTS.

(5) BOLT HOLES SHALL BE DRILLED OR PUNCHED. FLAME CUTTING MAY BE USED TO FINISH SLOTTED HOLES IF MECHANICALLY GUIDED AND FLAME CUTTING THE HOLES IS ONLY ALLOWED IN THE SHOP AND ONLY IF DONE BEFORE GALVANIZING OF THE PIECE.

(6) AT INTERIOR SPLICES, PIPE SPACERS SHALL BE USED ON ONLY ONE SIDE OF THE SPLICE TO ALLOW MOVEMENT ON THAT SIDE. THE TOP AND BOTTOM RAIL SHALL RECEIVE THE SAME TREATMENT. AT END SPLICES PIPE SPACERS SHALL BE USED ON BOTH SIDES OF THE SPLICE TO ALLOW MOVEMENT ON EACH SIDE.

(7) MILL OR SHOP TRANSVERSE WELDS SHALL NOT BE PERMITTED ON ANY RAIL ELEMENT. RAIL ELEMENTS USED ON CURVES SHALL USE 10 MM WALL TUBES AND SHALL BE SHOP FORMED TO THE REQUIRED CURVATURE.

(8) NO PUNCHING, DRILLING, CUTTING OR WELDING SHALL BE PERMITTED AFTER GALVANIZING, EXCEPT AS ALLOWED IN DETAILS A AND B. DAMAGED AREAS OF GALVANIZING SHALL BE THOROUGHLY CLEANED, PRETREATED, AND PAINTED WITH TWO COATS OF ORGANIC ZINC-RICH GALVANIZING REPAIR PAINT, HAVING A MINIMUM 94% ZINC BY WEIGHT, TO A THICKNESS EQUAL TO THE ORIGINAL COATING ACCORDING TO THE STANDARD SPECIFICATIONS AND ASTM A780M.

(9) NUTS FOR 25 MM DIA THREADED ANCHOR RODS CONNECTING THE BASE PLATE TO THE CONCRETE SHALL BE TIGHTENED TO A SNUG FIT AND GIVEN AN ADDITIONAL ⅛ TURN.

(10) THREADS FOR ANCHOR RODS MAY BE ROLLED OR CUT. IF CUT THREADS ARE USED, BOLT DIAMETER SHALL NOT BE LESS THAN NOMINAL DIAMETER. IF ROLLED THREADS ARE USED, ROD DIAMETER SHALL NOT BE LESS THAN ROOT DIAMETER OF THREADS.

(11) ANTI-LOCK MATERIAL SHALL BE APPLIED TO THE ANCHORE THREADS PRIOR TO INSTALLATION OF THE NUTS.

MATERIAL NOTES

(12) STRUCTURE TUBING SHALL CONFORM TO THE REQUIREMENT OF ASTM A500M, GRADE B OR ASTM A501M. TUB SECTIONS SHALL BE GALVANIZED AFTER FABRICATION IN ACCORDANCE WITH THE REQUIREMENT OF ASTM A123M FOLLOWED BY PAINTING ON THE EXTERIOR SURFACES.

(13) RAIL POST AND BASE PLATES SHALL CONFORM TO THE REQUIREMENTS OF ASTM A572M GR 345, EXCEPT ANCHOR PLATES MAY BE ASTM A36. THE POST SHALL BE GALVANIZED IN ACCORDANCE WITH ASTM A123.

(14) THREADED STUDS AND MATCHING NUTS FOR RAIL-TO-POST ATTACHMENT DETAIL "A" SHALL CONFORM TO ASTM A276M TYPE 304, STAINLESS STEEL, AND SHALL BE TORQUE TESTED PER AWS D1.5.7.7.1 DETAIL "B" BOLTS SHALL BE ASTM A325M OR A449M. ALL OTHER BOLTS AND NUTS SHALL CONFORM TO ASTM A307M AND ASTM A563M GRADE A RESPECTIVELY OR BETTER, EXCEPT THAT ASTM A307M NUTS MAY BE USED ON THE BOTTOM OF ANCHOR ASSEMBLY. WASHERS SHALL BE HARDENED STEEL COMMERCIAL TYPE A PLAIN WIDE WASHERS AND SHALL MEET THE DIMENSIONAL REQUIREMENTS OF A.N.S.I. B18.22 ANCHOR RODS SHALL CONFORM TO ASTM A449M.

(15) ALL STEEL COMPONENTS (EXCEPT STAINLESS) SHALL BE GALVANIZED AFTER FABRICATION IN CONFORMANCE TO AASHTO M232 (ASTM A153M) AND AASHTO M111 (ASTM A123M). THE GALVANIZING KETTLE SHALL HAVE 0.05 TO 0.09 PERCENT NICKEL. GALVANIZED SURFACES SHALL HAVE A UNIFORM APPEARANCE AND GALVANIZED MATERIAL SHALL BE PROPERLY STORED. IF PAINTING IS REQUIRED SEE SPECIAL PROVISIONS.

(16) DETAIL "A" STUDS SHALL BE WELDED ON AFTER TUBES ARE GALVANIZED BY SPOT GRINDING OFF GALVANIZING, WELDING ON STUDS THEN TOUCH UP GALVANIZING PER NOTE #8 ABOVE.

(17) PREFORMED BEARING PADS (3 MM THICK) SHALL CONFORM TO AASHTO M251.

(18) THIS BRIDGE RAIL SYSTEM WAS SUCCESSFULLY CRASH TESTED FOR AASHTO PL2 IN 1994 BY THE NEW ENGLAND TRANSPORTATION CONSORTIUM.

(19) PAINT COLOR: COLOR OF THE PAINT FOR THE TWO-TUBE BRIDGE RAIL SYSTEM SHOULD CONFORM TO FEDERAL STANDARD 595 COLOR FS 30108.

REV.	DATE	REVISION DESCRIPTION	SHEET NO.

Filename: Border Version: 6/1/05

THE INFORMATION, INCLUDING ESTIMATED QUANTITIES OF WORK, SHOWN ON THESE SHEETS IS BASED ON LIMITED INVESTIGATIONS BY THE STATE AND IS IN NO WAY WARRANTED TO INDICATE THE CONDITIONS OF ACTUAL QUANTITIES OF WORK WHICH WILL BE REQUIRED.

DESIGNER/DRAFTER: BW
CHECKED BY: JCM
SCALE AS NOTED

STATE OF CONNECTICUT
DEPARTMENT OF TRANSPORTATION
ENGINEER: OFFICE OF ENGINEERING
APPROVED BY: DATE:

OFFICE OF ENGINEERING

PROJECT TITLE: ROUTE 148 OVER GREAT BROOK BR. NO. 02695 BRIDGE REPLACEMENT

TOWN: CHESTER

DRAWING TITLE: TWO-TUBE BRIDGE RAIL DETAILS

PROJECT NO. 26-118
DRAWING NO. S-13
SHEET NO. 06.013